Circuit Breaker for Equipment thermal vertical, THT terminals for PCB mounting, 1 pole

See below:
Approvals and Compliances

Description
- Thermal circuit breaker
- 1-pole
- On request available with elevaled glow-wire ratings
- THT connectors

Unique Selling Proposition
- Reset type
- Cycling trip-free release
- Compact design
- Different mounting possibilities

Applications
- Power supplies
- Uninterruptible power supply
- Power tools
- Industrial appliances
- HVAC
- Household appliances

Weblinks
pdf datasheet, html-datasheet, General Product Information, Distributor-Stock-Check, Detailed request for product, Product News, Video

Technical Data

Rated Voltage AC	240 V, 50 / 60 Hz
Rated Voltage DC	48 V
Rated current	4-12 A
Conditional short circuit capacity	IEC: Inc, PC1, AC 240 V: 2 kA
	UL / CSA: SC, AC 240 V DC 48 / 32 V: 2 kA, C1
Degree of protection front side	IP 40
Endurance minimum	IEC: 200% Ir, cos φ 0.6: min. 50 switching cycles
Endurance typical	4-8 A: 150% Ir, cos φ 0.9: 2500 switching cycles
	10-12 A: 150% Ir, cos φ 0.9: 6000 switching cycles
Dielectric Strength	1500 VAC
Insulation Resistance	500 VDC > 1000 MΩ

Ambient temperature	5-12 A: -5 °C to 60 °C
	4 A: -5°C to 50 °C
Soldering Methods	Wave
Solderability	245 °C / 3 sec acc. to IEC 60068-2-20 / Test Ta, method 1
Resistance to Soldering Heat	260 °C / 10 sec acc. to IEC 60068-2-20 / Test Tb, method 1A
Weight	approx. 12.5 g

Approvals and Compliances

Detailed information on product approvals, code requirements, usage instructions and detailed test conditions can be looked up in Details about Approvals

Approvals

The approval mark is used by the testing authorities to certify compliance with the safety requirements placed on electronic products.

Approval Reference Type: T9

Approval Logo	Certificates	Certification Body	Description
	VDE Approvals	VDE	VDE Certificate Number: 40038016
	UL Approvals	UL	UL File Number: E71572
	CQC Approvals	CQC	CCC Certificate Number: 2013010307617688

Product standards

Product standards that are referenced

Organization	Design	Standard	Description
IEC	Designed according to	IEC 60934	Circuit-breakers for equipment (CBE)
UL	Designed according to	UL 1077	Standard for Supplementary Protectors for Use in Electrical Equipment
CSA Group	Designed according to	CSA C22.2 No. 235	Supplementary Protectors
CCC	Designed according to	GB 17701	Circuit-breaker for equipment

Application standards

Application standards where the product can be used

Organization	Design	Standard	Description
IEC	Designed for applications acc.	IEC/UL 60950	IEC 60950-1 includes the basic requirements for the safety of information technologyequipment.

Compliances

The product complies with following Guide Lines

Identification	Details	Initiator	Description
CE	CE declaration of conformity	SCHURTER AG	The CE marking declares that the product complies with the applicable requirements laid down in the harmonisation of Community legislation on its affixing in accordance with EU Regulation 765/2008.
RoHS	RoHS	SCHURTER AG	EU Directive RoHS 2011/65/EU
China RoHS	China RoHS	SCHURTER AG	The law SJ / T 11363-2006 (China RoHS) has been in force since 1 March 2007. It is similar to the EU directive RoHS.
REACH	REACH	SCHURTER AG	On 1 June 2007, Regulation (EC) No 1907/2006 on the Registration, Evaluation, Authorization and Restriction of Chemicals 1 (abbreviated as "REACH") entered into force.

Dimension [mm]

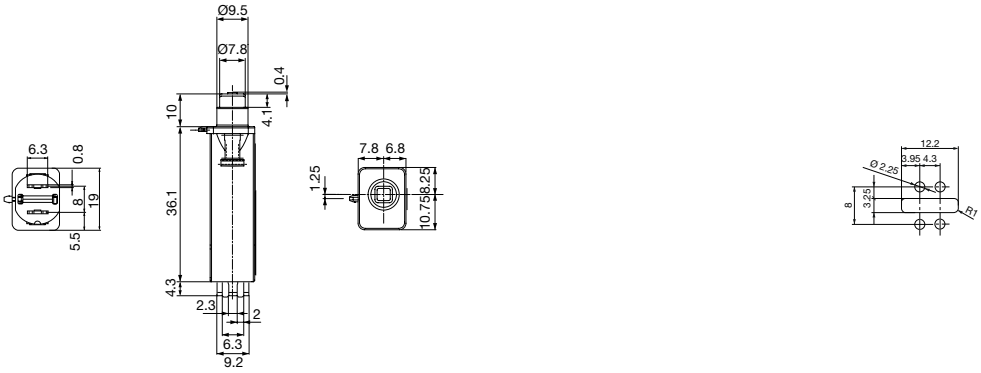

Approval		Rated current	Rated voltage AC	Rated voltage DC
c UL us	UL 1077	4 - 12 A	240 V	48 V
c UL us	CSA 22.2 235	4 - 12 A	240 V	48 V
DVE	IEC 60934	4 - 12 A	240 V	48 V
CCC	GB 17701	4 - 12 A	240 V	48 V

Typical internal resistance

Rated Current [A]	Internal Resistance [mΩ]
4	26.3
5	24.1
6	19.0
7	18.0
8	14.8
10	13.0
12	12.7

Time-Current-Curves

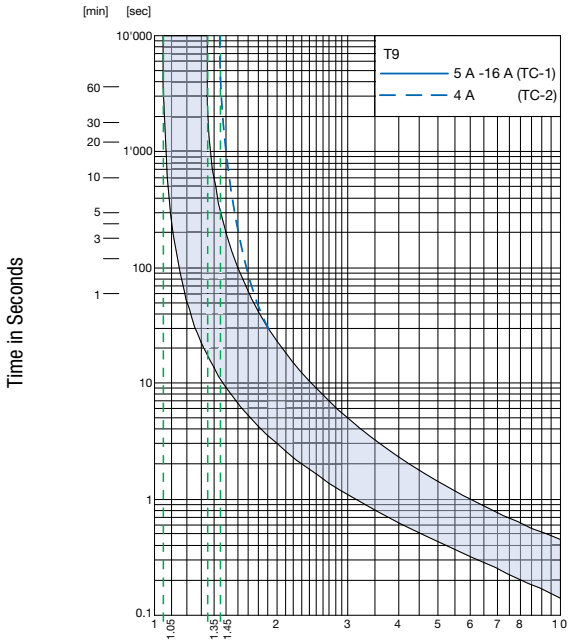

Reference Temperature +23°

Effect of ambient temperature

The units are calibrated for an ambient temperature of +23°C. To determine the rated current for a lower or higher ambient temperature, use a correction factor (typical value) from the table below:

Ambient temperature [°C]	Correction factor
-5	0,85
+10	0,95
+23	1,00
+40	1,08
+60	1,21

Example: Rated current = 10 A; Environmental temperature = 60 °C; --> Correction factor = 1.21; Resulting current = 12.1 A --> Fount to next higher rated current: 13 A

Variants

connection type	Rated current	Order Number
Solder, THT	4A	3-101-228
Solder, THT	5A	3-101-227
Solder, THT	6A	3-101-226
Solder, THT	7A	3-101-232

connection type	Rated current	Order Number
Solder, THT	8A	3-101-231
Solder, THT	10A	3-101-230
Solder, THT	12A	3-101-229

Availability for all products can be searched real-time:https://www.schurter.com/en/Stock-Check/Stock-Check-SCHURTER

Packaging Unit 100 Pcs

12.01.2018