Data sheet | Item number: 2020-5417/1102-950

4-conductor sensor terminal block; LED (yellow); for PNP-(high-side) switching sensors; with ground contact; with pluggable signal level; 1 mm²; Push-in CAGE CLAMP®; 1,00 mm²; gray

www.wago.com/2020-5417/1102-950

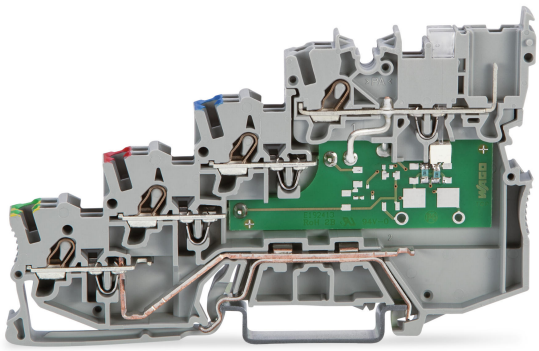

RoHS Compliant ✓ BOMcheck.net Color:

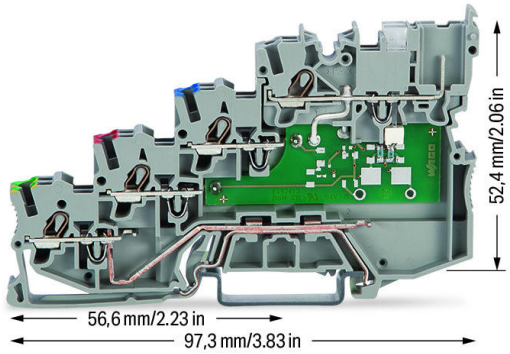

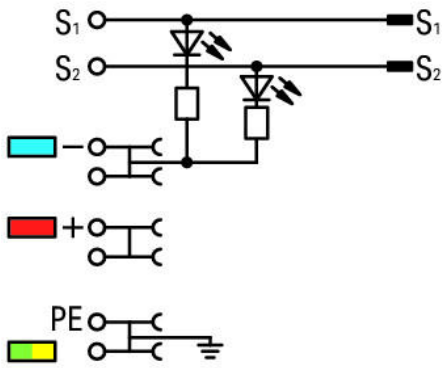

Item description

3.5 mm spacing per signal (2 x 3.5 mm = 7 mm)

The double spacing per pole of this terminal block series maximizes connectivity. For example, ten sensors may be connected using only five sensor terminal blocks plus a power supply terminal block.

Subject to changes. Please also observe the further product documentation!

WAGO Kontakttechnik GmbH & Co. KG
Hansastr. 27
32423 Minden
Phone: +49571 887-0 | Fax: +49571 887-169
Email: info.de@wago.com | Web: www.wago.com

Do you have any questions about our products?
We are always happy to take your call at +49 (571) 887-44222.

Data

Electrical data

Voltage type 1	DC
Nominal voltage	24 V

Ratings per IEC/EN

Rated current	13.5 A

Ratings per UL

Approvals per	UL 1059
Rated voltage UL (Use Group B)	300 V
Rated current UL (Use Group B)	15 A
Rated voltage UL (Use Group D)	300 V
Rated current UL (Use Group D)	15 A

Ratings per CSA

Approvals per	C22.2 No 158
Rated voltage CSA (Use Group C)	24 V
Rated current CSA (Use Group C)	10 A

Connection data

Connection technology	Push-in CAGE CLAMP®
Actuation type	Push-in Open Tool Slot
Connectable conductor materials	Copper
Nominal cross-section	1 mm²
Solid conductor	0.14 … 1.5 mm² / 24 … 16 AWG
Solid conductor; push-in termination	0.5 … 1.5 mm² / 20 … 16 AWG
Fine-stranded conductor	0.14 … 1.5 mm² / 24 … 16 AWG
Fine-stranded conductor; with insulated ferrule	0.5 … 0.75 mm² / 20 … 18 AWG
Fine-stranded conductor; with ferrule; push-in termination	0.5 … 0.75 mm² / 20 … 18 AWG
Note (conductor cross-section)	Depending on the conductor characteristic, a conductor with a smaller cross-section can also be inserted via push-in termination.
Strip length	9 … 11 mm / 0.35 … 0.43 inch
Total number of connection points	8

Subject to changes. Please also observe the further product documentation!

WAGO Kontakttechnik GmbH & Co. KG
Hansastr. 27
32423 Minden
Phone: +49571 887-0 | Fax: +49571 887-169
Email: info.de@wago.com | Web: www.wago.com

Do you have any questions about our products?
We are always happy to take your call at +49 (571) 887-44222.

Total number of potentials	5
Number of levels	4
Wiring type	Front-entry wiring
Number of jumper slots	4

Physical data

Width	7 mm / 0.276 inch
Height	97.3 mm / 3.831 inch

Mechanical data

Design	horizontal type
Mounting type	DIN-35 rail
Marking level	Center/side marking

Material data

Color	gray
Insulation material	Polyamide (PA66)
Fire load	0.012 MJ
Weight	22.4 g

Commercial data

Packaging type	BOX
Country of origin	DE
GTIN	4055143528634
Customs tariff number	85369010000

Approvals / Certificates

Country specific Approvals

Logo	Approval	Additional Approval Text	Certificate name
	CCA DEKRA Certification B.V.	EN 60947	NTR NL 7617
	CSA DEKRA Certification B.V.	C22.2 No. 158	2516073

Subject to changes. Please also observe the further product documentation!

WAGO Kontakttechnik GmbH & Co. KG
Hansastr. 27
32423 Minden
Phone: +49571 887-0 | Fax: +49571 887-169
Email: info.de@wago.com | Web: www.wago.com

Do you have any questions about our products?
We are always happy to take your call at +49 (571) 887-44222.

	KEMA/KEUR DEKRA Certification B.V.	EN 60947	71-100670

UL-Approvals

Logo	Approval	Additional Approval Text	Certificate name
	UL UL International Germany GmbH	UL 1059	20171023-E45172

Required accessories

End plate

	Item no.: 2020-5491 End and intermediate plate; 1 mm thick; for 4-conductor terminal blocks; gray	www.wago.com/2020-5491

Compatible products

tools

	Item no.: 210-647 Operating tool; Blade: 2.5 x 0.4 mm; with a partially insulated shaft; multicoloured	www.wago.com/210-647
	Item no.: 210-648 Operating tool; Blade: 2.5 x 0.4 mm; with a partially insulated shaft; angled; short	www.wago.com/210-648
	Item no.: 210-719 Operating tool; Blade: 2.5 x 0.4 mm; with a partially insulated shaft	www.wago.com/210-719

Jumper

	Item no.: 2000-402 Jumper; 2-way; insulated; light gray	www.wago.com/2000-402
	Item no.: 2000-402/000-005 Jumper; 2-way; insulated; red	www.wago.com/2000-402/000-005
	Item no.: 2000-402/000-006 Jumper; 2-way; insulated; blue	www.wago.com/2000-402/000-006
	Item no.: 2000-402/000-018 Jumper; 2-way; insulated; yellow-green	www.wago.com/2000-402/000-018

Subject to changes. Please also observe the further product documentation!

WAGO Kontakttechnik GmbH & Co. KG
Hansastr. 27
32423 Minden
Phone: +49571 887-0 | Fax: +49571 887-169
Email: info.de@wago.com | Web: www.wago.com

Do you have any questions about our products?
We are always happy to take your call at +49 (571) 887-44222.

	Item no.: 2000-403 Jumper; 3-way; insulated; light gray	www.wago.com/2000-403
	Item no.: 2000-403/000-005 Jumper; 3-way; insulated; red	www.wago.com/2000-403/000-005
	Item no.: 2000-403/000-006 Jumper; 3-way; insulated; blue	www.wago.com/2000-403/000-006
	Item no.: 2000-404 Jumper; 4-way; insulated; light gray	www.wago.com/2000-404
	Item no.: 2000-404/000-005 Jumper; 4-way; insulated; red	www.wago.com/2000-404/000-005
	Item no.: 2000-404/000-006 Jumper; 4-way; insulated; blue	www.wago.com/2000-404/000-006
	Item no.: 2000-405 Jumper; 5-way; insulated; light gray	www.wago.com/2000-405
	Item no.: 2000-405/000-005 Jumper; 5-way; insulated; red	www.wago.com/2000-405/000-005
	Item no.: 2000-405/000-006 Jumper; 5-way; insulated; blue	www.wago.com/2000-405/000-006
	Item no.: 2000-405/011-000 Star point jumper; 3-way; insulated; light gray	www.wago.com/2000-405/011-000
	Item no.: 2000-406 Jumper; 6-way; insulated; light gray	www.wago.com/2000-406
	Item no.: 2000-406/000-005 Jumper; 6-way; insulated; red	www.wago.com/2000-406/000-005
	Item no.: 2000-406/000-006 Jumper; 6-way; insulated; blue	www.wago.com/2000-406/000-006
	Item no.: 2000-406/020-000 Delta jumper; insulated; light gray	www.wago.com/2000-406/020-000

Subject to changes. Please also observe the further product documentation!

WAGO Kontakttechnik GmbH & Co. KG
Hansastr. 27
32423 Minden
Phone: +49571 887-0 | Fax: +49571 887-169
Email: info.de@wago.com | Web: www.wago.com

Do you have any questions about our products?
We are always happy to take your call at +49 (571) 887-44222.

	Item no.: 2000-407 Jumper; 7-way; insulated; light gray	www.wago.com/2000-407
	Item no.: 2000-407/000-005 Jumper; 7-way; insulated; red	www.wago.com/2000-407 /000-005
	Item no.: 2000-407/000-006 Jumper; 7-way; insulated; blue	www.wago.com/2000-407 /000-006
	Item no.: 2000-408 Jumper; 8-way; insulated; light gray	www.wago.com/2000-408
	Item no.: 2000-408/000-005 Jumper; 8-way; insulated; red	www.wago.com/2000-408 /000-005
	Item no.: 2000-408/000-006 Jumper; 8-way; insulated; blue	www.wago.com/2000-408 /000-006
	Item no.: 2000-409 Jumper; 9-way; insulated; light gray	www.wago.com/2000-409
	Item no.: 2000-409/000-005 Jumper; 9-way; insulated; red	www.wago.com/2000-409 /000-005
	Item no.: 2000-409/000-006 Jumper; 9-way; insulated; blue	www.wago.com/2000-409 /000-006
	Item no.: 2000-410 Jumper; 10-way; insulated; light gray	www.wago.com/2000-410
	Item no.: 2000-410/000-005 Jumper; 10-way; insulated; red	www.wago.com/2000-410 /000-005
	Item no.: 2000-410/000-006 Jumper; 10-way; insulated; blue	www.wago.com/2000-410 /000-006
	Item no.: 2000-433 Jumper; from 1 to 3; insulated; light gray	www.wago.com/2000-433
	Item no.: 2000-433/000-005 Jumper; from 1 to 3; insulated; red	www.wago.com/2000-433 /000-005
	Item no.: 2000-433/000-006 Jumper; from 1 to 3; insulated; blue	www.wago.com/2000-433 /000-006

Subject to changes. Please also observe the further product documentation!

WAGO Kontakttechnik GmbH & Co. KG
Hansastr. 27
32423 Minden
Phone: +49571 887-0 | Fax: +49571 887-169
Email: info.de@wago.com | Web: www.wago.com

Do you have any questions about our products?
We are always happy to take your call at +49 (571) 887-44222.

	Item no.: 2000-434 Jumper; from 1 to 4; insulated; light gray	www.wago.com/2000-434
	Item no.: 2000-435 Jumper; from 1 to 5; insulated; light gray	www.wago.com/2000-435
	Item no.: 2000-436 Jumper; from 1 to 6; insulated; light gray	www.wago.com/2000-436
	Item no.: 2000-437 Jumper; from 1 to 7; insulated; light gray	www.wago.com/2000-437
	Item no.: 2000-438 Jumper; from 1 to 8; insulated; light gray	www.wago.com/2000-438
	Item no.: 2000-439 Jumper; from 1 to 9; insulated; light gray	www.wago.com/2000-439
	Item no.: 2000-440 Jumper; from 1 to 10; insulated; light gray	www.wago.com/2000-440
	Item no.: 210-103 Wire commoning chain; insulated; black	www.wago.com/210-103
	Item no.: 210-123 Wire commoning chain; insulated; blue	www.wago.com/210-123
Push-In type wire jumper		
	Item no.: 2009-402 Push-in type wire jumper; 0.75 mm²; insulated; 60 mm long; gray	www.wago.com/2009-402
	Item no.: 2009-404 Push-in type wire jumper; 0.75 mm²; insulated; 110 mm long; gray	www.wago.com/2009-404
	Item no.: 2009-406 Push-in type wire jumper; 0.75 mm²; insulated; 250 mm long; gray	www.wago.com/2009-406
Protective Warning Marker		
	Item no.: 2000-115 Protective warning marker; with high-voltage symbol, black; for 5 terminal blocks; yellow	www.wago.com/2000-115
check		
	Item no.: 2000-510 TOPJOB®S L-type test plug module; modular; for jumper contact slot; 1,00 mm²; gray	www.wago.com/2000-510
	Item no.: 2000-552 Modular TOPJOB®S connector; modular; for jumper contact slot; 2-pole; 1,00 mm²; gray	www.wago.com/2000-552
	Item no.: 2000-553 Modular TOPJOB®S connector; modular; for jumper contact slot; 3-pole; 1,00 mm²; gray	www.wago.com/2000-553
	Item no.: 2000-554 Modular TOPJOB®S connector; modular; for jumper contact slot; 4-pole; 1,00 mm²; gray	www.wago.com/2000-554

Subject to changes. Please also observe the further product documentation!

WAGO Kontakttechnik GmbH & Co. KG
Hansastr. 27
32423 Minden
Phone: +49571 887-0 | Fax: +49571 887-169
Email: info.de@wago.com | Web: www.wago.com

Do you have any questions about our products?
We are always happy to take your call at +49 (571) 887-44222.

	Item no.: 2000-555 Modular TOPJOB®S connector; modular; for jumper contact slot; 5-pole; 1,00 mm²; gray	www.wago.com/2000-555
	Item no.: 2000-556 Modular TOPJOB®S connector; modular; for jumper contact slot; 6-pole; 1,00 mm²; gray	www.wago.com/2000-556
	Item no.: 2000-557 Modular TOPJOB®S connector; modular; for jumper contact slot; 7-pole; 1,00 mm²; gray	www.wago.com/2000-557
	Item no.: 2000-558 Modular TOPJOB®S connector; modular; for jumper contact slot; 8-pole; 1,00 mm²; gray	www.wago.com/2000-558
	Item no.: 2000-559 Modular TOPJOB®S connector; modular; for jumper contact slot; 9-pole; 1,00 mm²; gray	www.wago.com/2000-559
	Item no.: 2000-560 Modular TOPJOB®S connector; modular; for jumper contact slot; 10-pole; 1,00 mm²; gray	www.wago.com/2000-560
	Item no.: 2009-174 Test plug adapter; for 4 mm Ø test plugs; for testing TOPJOB®S rail-mounted terminal blocks; gray	www.wago.com/2009-174
	Item no.: 2009-182 Testing tap; for max. 2.5 mm²; tool-free connection for individual test wires 0.08 - 2.5 mm; gray	www.wago.com/2009-182
ferrule		
	Item no.: 216-241 Ferrule; Sleeve for 0.5 mm² / 20 AWG; insulated; electro-tin plated; electrolytic copper; gastight crimped; acc. to DIN 46228, Part 4/09.90; white	www.wago.com/216-241
	Item no.: 216-242 Ferrule; Sleeve for 0.75 mm² / 18 AWG; insulated; electro-tin plated; electrolytic copper; gastight crimped; acc. to DIN 46228, Part 4/09.90; gray	www.wago.com/216-242
	Item no.: 216-243 Ferrule; Sleeve for 1 mm² / AWG 18; insulated; electro-tin plated; electrolytic copper; gastight crimped; acc. to DIN 46228, Part 4/09.90; red	www.wago.com/216-243
Female plug		
	Item no.: 2020-102 1-conductor female plug; 1.5 mm²; 2-pole; 1,50 mm²; gray	www.wago.com/2020-102
	Item no.: 2020-102/122-000 1-conductor female plug; Locking lever; 1.5 mm²; 2-pole; 1,50 mm²; gray	www.wago.com/2020-102/122-000
	Item no.: 2020-102/132-000 1-conductor female plug; Strain relief plate; 1.5 mm²; 2-pole; 1,50 mm²; gray	www.wago.com/2020-102/132-000
	Item no.: 2020-102/142-000 1-conductor female plug; Strain relief plate; 1.5 mm²; 2-pole; 1,50 mm²; gray	www.wago.com/2020-102/142-000
	Item no.: 2020-103 1-conductor female plug; 1.5 mm²; 3-pole; 1,50 mm²; gray	www.wago.com/2020-103

Subject to changes. Please also observe the further product documentation!

WAGO Kontakttechnik GmbH & Co. KG
Hansastr. 27
32423 Minden
Phone: +49571 887-0 | Fax: +49571 887-169
Email: info.de@wago.com | Web: www.wago.com

Do you have any questions about our products?
We are always happy to take your call at +49 (571) 887-44222.

	Item no.: 2020-103/000-036 1-conductor female plug; 1.5 mm²; 3-pole; 1,50 mm²; gray, green-yellow	www.wago.com/2020-103/000-036
	Item no.: 2020-103/000-037 1-conductor female plug; 1.5 mm²; 3-pole; 1,50 mm²; green-yellow, gray	www.wago.com/2020-103/000-037
	Item no.: 2020-103/000-038 1-conductor female plug; 1.5 mm²; 3-pole; 1,50 mm²; gray, blue, green-yellow	www.wago.com/2020-103/000-038
	Item no.: 2020-103/000-039 1-conductor female plug; 1.5 mm²; 3-pole; 1,50 mm²; green-yellow, blue, gray	www.wago.com/2020-103/000-039
	Item no.: 2020-103/122-000 1-conductor female plug; Locking lever; 1.5 mm²; 3-pole; 1,50 mm²; gray	www.wago.com/2020-103/122-000
	Item no.: 2020-103/132-000 1-conductor female plug; Strain relief plate; 1.5 mm²; 3-pole; 1,50 mm²; gray	www.wago.com/2020-103/132-000
	Item no.: 2020-103/142-000 1-conductor female plug; Strain relief plate; 1.5 mm²; 3-pole; 1,50 mm²; gray	www.wago.com/2020-103/142-000
	Item no.: 2020-104 1-conductor female plug; 1.5 mm²; 4-pole; 1,50 mm²; gray	www.wago.com/2020-104
	Item no.: 2020-104/000-036 1-conductor female plug; 1.5 mm²; 4-pole; 1,50 mm²; gray, green-yellow	www.wago.com/2020-104/000-036
	Item no.: 2020-104/000-037 1-conductor female plug; 1.5 mm²; 4-pole; 1,50 mm²; green-yellow, gray	www.wago.com/2020-104/000-037
	Item no.: 2020-104/000-038 1-conductor female plug; 1.5 mm²; 4-pole; 1,50 mm²; gray, blue, green-yellow	www.wago.com/2020-104/000-038
	Item no.: 2020-104/000-039 1-conductor female plug; 1.5 mm²; 4-pole; 1,50 mm²; green-yellow, blue, gray	www.wago.com/2020-104/000-039
	Item no.: 2020-104/124-000 1-conductor female plug; Locking lever; 1.5 mm²; 4-pole; 1,50 mm²; gray	www.wago.com/2020-104/124-000

Subject to changes. Please also observe the further product documentation!

WAGO Kontakttechnik GmbH & Co. KG
Hansastr. 27
32423 Minden
Phone: +49571 887-0 | Fax: +49571 887-169
Email: info.de@wago.com | Web: www.wago.com

Do you have any questions about our products?
We are always happy to take your call at +49 (571) 887-44222.

	Item no.: 2020-104/133-000 1-conductor female plug; Strain relief plate; 1.5 mm²; 4-pole; 1,50 mm²; gray	www.wago.com/2020-104/133-000
	Item no.: 2020-104/143-000 1-conductor female plug; Strain relief plate; 1.5 mm²; 4-pole; 1,50 mm²; gray	www.wago.com/2020-104/143-000
	Item no.: 2020-105 1-conductor female plug; 1.5 mm²; 5-pole; 1,50 mm²; gray	www.wago.com/2020-105
	Item no.: 2020-105/000-036 1-conductor female plug; 1.5 mm²; 5-pole; 1,50 mm²; gray, green-yellow	www.wago.com/2020-105/000-036
	Item no.: 2020-105/000-037 1-conductor female plug; 1.5 mm²; 5-pole; 1,50 mm²; green-yellow, gray	www.wago.com/2020-105/000-037
	Item no.: 2020-105/000-038 1-conductor female plug; 1.5 mm²; 5-pole; 1,50 mm²; gray, blue, green-yellow	www.wago.com/2020-105/000-038
	Item no.: 2020-105/000-039 1-conductor female plug; 1.5 mm²; 5-pole; 1,50 mm²; green-yellow, blue, gray	www.wago.com/2020-105/000-039
	Item no.: 2020-105/124-000 1-conductor female plug; Locking lever; 1.5 mm²; 5-pole; 1,50 mm²; gray	www.wago.com/2020-105/124-000
	Item no.: 2020-105/133-000 1-conductor female plug; Strain relief plate; 1.5 mm²; 5-pole; 1,50 mm²; gray	www.wago.com/2020-105/133-000
	Item no.: 2020-105/143-000 1-conductor female plug; Strain relief plate; 1.5 mm²; 5-pole; 1,50 mm²; gray	www.wago.com/2020-105/143-000
	Item no.: 2020-106 1-conductor female plug; 1.5 mm²; 6-pole; 1,50 mm²; gray	www.wago.com/2020-106
	Item no.: 2020-106/000-036 1-conductor female plug; 1.5 mm²; 6-pole; 1,50 mm²; gray, green-yellow	www.wago.com/2020-106/000-036
	Item no.: 2020-106/000-037 1-conductor female plug; 1.5 mm²; 6-pole; 1,50 mm²; green-yellow, gray	www.wago.com/2020-106/000-037
	Item no.: 2020-106/000-038 1-conductor female plug; 1.5 mm²; 6-pole; 1,50 mm²; gray, blue, green-yellow	www.wago.com/2020-106/000-038

Subject to changes. Please also observe the further product documentation!

WAGO Kontakttechnik GmbH & Co. KG
Hansastr. 27
32423 Minden
Phone: +49571 887-0 | Fax: +49571 887-169
Email: info.de@wago.com | Web: www.wago.com

Do you have any questions about our products?
We are always happy to take your call at +49 (571) 887-44222.

	Item no.: 2020-106/000-039 1-conductor female plug; 1.5 mm²; 6-pole; 1,50 mm²; green-yellow, blue, gray	www.wago.com/2020-106/000-039
	Item no.: 2020-106/124-000 1-conductor female plug; Locking lever; 1.5 mm²; 6-pole; 1,50 mm²; gray	www.wago.com/2020-106/124-000
	Item no.: 2020-106/133-000 1-conductor female plug; Strain relief plate; 1.5 mm²; 6-pole; 1,50 mm²; gray	www.wago.com/2020-106/133-000
	Item no.: 2020-106/143-000 1-conductor female plug; Strain relief plate; 1.5 mm²; 6-pole; 1,50 mm²; gray	www.wago.com/2020-106/143-000
	Item no.: 2020-107 1-conductor female plug; 1.5 mm²; 7-pole; 1,50 mm²; gray	www.wago.com/2020-107
	Item no.: 2020-107/000-036 1-conductor female plug; 1.5 mm²; 7-pole; 1,50 mm²; gray, green-yellow	www.wago.com/2020-107/000-036
	Item no.: 2020-107/000-037 1-conductor female plug; 1.5 mm²; 7-pole; 1,50 mm²; green-yellow, gray	www.wago.com/2020-107/000-037
	Item no.: 2020-107/000-038 1-conductor female plug; 1.5 mm²; 7-pole; 1,50 mm²; gray, blue, green-yellow	www.wago.com/2020-107/000-038
	Item no.: 2020-107/000-039 1-conductor female plug; 1.5 mm²; 7-pole; 1,50 mm²; green-yellow, blue, gray	www.wago.com/2020-107/000-039
	Item no.: 2020-107/124-000 1-conductor female plug; Locking lever; 1.5 mm²; 7-pole; 1,50 mm²; gray	www.wago.com/2020-107/124-000
	Item no.: 2020-107/134-000 1-conductor female plug; Strain relief plate; 1.5 mm²; 7-pole; 1,50 mm²; gray	www.wago.com/2020-107/134-000
	Item no.: 2020-107/144-000 1-conductor female plug; Strain relief plate; 1.5 mm²; 7-pole; 1,50 mm²; gray	www.wago.com/2020-107/144-000
	Item no.: 2020-108 1-conductor female plug; 1.5 mm²; 8-pole; 1,50 mm²; gray	www.wago.com/2020-108
	Item no.: 2020-108/000-036 1-conductor female plug; 1.5 mm²; 8-pole; 1,50 mm²; gray, green-yellow	www.wago.com/2020-108/000-036

Subject to changes. Please also observe the further product documentation!

WAGO Kontakttechnik GmbH & Co. KG
Hansastr. 27
32423 Minden
Phone: +49571 887-0 | Fax: +49571 887-169
Email: info.de@wago.com | Web: www.wago.com

Do you have any questions about our products?
We are always happy to take your call at +49 (571) 887-44222.

	Item no.: 2020-108/000-037 1-conductor female plug; 1.5 mm²; 8-pole; 1,50 mm²; green-yellow, gray	www.wago.com/2020-108/000-037
	Item no.: 2020-108/000-038 1-conductor female plug; 1.5 mm²; 8-pole; 1,50 mm²; gray, blue, green-yellow	www.wago.com/2020-108/000-038
	Item no.: 2020-108/000-039 1-conductor female plug; 1.5 mm²; 8-pole; 1,50 mm²; green-yellow, blue, gray	www.wago.com/2020-108/000-039
	Item no.: 2020-108/124-000 1-conductor female plug; Locking lever; 1.5 mm²; 8-pole; 1,50 mm²; gray	www.wago.com/2020-108/124-000
	Item no.: 2020-108/134-000 1-conductor female plug; Strain relief plate; 1.5 mm²; 8-pole; 1,50 mm²; gray	www.wago.com/2020-108/134-000
	Item no.: 2020-108/144-000 1-conductor female plug; Strain relief plate; 1.5 mm²; 8-pole; 1,50 mm²; gray	www.wago.com/2020-108/144-000
	Item no.: 2020-109 1-conductor female plug; 1.5 mm²; 9-pole; 1,50 mm²; gray	www.wago.com/2020-109
	Item no.: 2020-109/000-036 1-conductor female plug; 1.5 mm²; 9-pole; 1,50 mm²; gray, green-yellow	www.wago.com/2020-109/000-036
	Item no.: 2020-109/000-037 1-conductor female plug; 1.5 mm²; 9-pole; 1,50 mm²; green-yellow, gray	www.wago.com/2020-109/000-037
	Item no.: 2020-109/000-038 1-conductor female plug; 1.5 mm²; 9-pole; 1,50 mm²; gray, blue, green-yellow	www.wago.com/2020-109/000-038
	Item no.: 2020-109/000-039 1-conductor female plug; 1.5 mm²; 9-pole; 1,50 mm²; green-yellow, blue, gray	www.wago.com/2020-109/000-039
	Item no.: 2020-109/124-000 1-conductor female plug; Locking lever; 1.5 mm²; 9-pole; 1,50 mm²; gray	www.wago.com/2020-109/124-000
	Item no.: 2020-109/134-000 1-conductor female plug; Strain relief plate; 1.5 mm²; 9-pole; 1,50 mm²; gray	www.wago.com/2020-109/134-000
	Item no.: 2020-109/144-000 1-conductor female plug; Strain relief plate; 1.5 mm²; 9-pole; 1,50 mm²; gray	www.wago.com/2020-109/144-000

Subject to changes. Please also observe the further product documentation!

WAGO Kontakttechnik GmbH & Co. KG
Hansastr. 27
32423 Minden
Phone: +49571 887-0 | Fax: +49571 887-169
Email: info.de@wago.com | Web: www.wago.com

Do you have any questions about our products?
We are always happy to take your call at +49 (571) 887-44222.

	Item no.: 2020-110 1-conductor female plug; 1.5 mm²; 10-pole; 1,50 mm²; gray	www.wago.com/2020-110
	Item no.: 2020-110/000-036 1-conductor female plug; 1.5 mm²; 10-pole; 1,50 mm²; gray, green-yellow	www.wago.com/2020-110 /000-036
	Item no.: 2020-110/000-037 1-conductor female plug; 1.5 mm²; 10-pole; 1,50 mm²; green-yellow, gray	www.wago.com/2020-110 /000-037
	Item no.: 2020-110/000-038 1-conductor female plug; 1.5 mm²; 10-pole; 1,50 mm²; gray, blue, green-yellow	www.wago.com/2020-110 /000-038
	Item no.: 2020-110/000-039 1-conductor female plug; 1.5 mm²; 10-pole; 1,50 mm²; green-yellow, blue, gray	www.wago.com/2020-110 /000-039
	Item no.: 2020-110/125-000 1-conductor female plug; Locking lever; 1.5 mm²; 10-pole; 1,50 mm²; gray	www.wago.com/2020-110 /125-000
	Item no.: 2020-110/135-000 1-conductor female plug; Strain relief plate; 1.5 mm²; 10-pole; 1,50 mm²; gray	www.wago.com/2020-110 /135-000
	Item no.: 2020-110/145-000 1-conductor female plug; Strain relief plate; 1.5 mm²; 10-pole; 1,50 mm²; gray	www.wago.com/2020-110 /145-000
	Item no.: 2020-111 1-conductor female plug; 1.5 mm²; 11-pole; 1,50 mm²; gray	www.wago.com/2020-111
	Item no.: 2020-111/000-036 1-conductor female plug; 1.5 mm²; 11-pole; 1,50 mm²; gray, green-yellow	www.wago.com/2020-111 /000-036
	Item no.: 2020-111/000-037 1-conductor female plug; 1.5 mm²; 11-pole; 1,50 mm²; green-yellow, gray	www.wago.com/2020-111 /000-037
	Item no.: 2020-111/000-038 1-conductor female plug; 1.5 mm²; 11-pole; 1,50 mm²; gray, blue, green-yellow	www.wago.com/2020-111 /000-038
	Item no.: 2020-111/000-039 1-conductor female plug; 1.5 mm²; 11-pole; 1,50 mm²; green-yellow, blue, gray	www.wago.com/2020-111 /000-039
	Item no.: 2020-111/125-000 1-conductor female plug; Locking lever; 1.5 mm²; 11-pole; 1,50 mm²; gray	www.wago.com/2020-111 /125-000

Subject to changes. Please also observe the further product documentation!

WAGO Kontakttechnik GmbH & Co. KG
Hansastr. 27
32423 Minden
Phone: +49571 887-0 | Fax: +49571 887-169
Email: info.de@wago.com | Web: www.wago.com

Do you have any questions about our products?
We are always happy to take your call at +49 (571) 887-44222.

	Item no.: 2020-111/135-000 1-conductor female plug; Strain relief plate; 1.5 mm²; 11-pole; 1,50 mm²; gray	www.wago.com/2020-111/135-000
	Item no.: 2020-111/145-000 1-conductor female plug; Strain relief plate; 1.5 mm²; 11-pole; 1,50 mm²; gray	www.wago.com/2020-111/145-000
	Item no.: 2020-112 1-conductor female plug; 1.5 mm²; 12-pole; 1,50 mm²; gray	www.wago.com/2020-112
	Item no.: 2020-112/000-036 1-conductor female plug; 1.5 mm²; 12-pole; 1,50 mm²; gray, green-yellow	www.wago.com/2020-112/000-036
	Item no.: 2020-112/000-037 1-conductor female plug; 1.5 mm²; 12-pole; 1,50 mm²; green-yellow, gray	www.wago.com/2020-112/000-037
	Item no.: 2020-112/000-038 1-conductor female plug; 1.5 mm²; 12-pole; 1,50 mm²; gray, blue, green-yellow	www.wago.com/2020-112/000-038
	Item no.: 2020-112/000-039 1-conductor female plug; 1.5 mm²; 12-pole; 1,50 mm²; green-yellow, blue, gray	www.wago.com/2020-112/000-039
	Item no.: 2020-112/125-000 1-conductor female plug; Locking lever; 1.5 mm²; 12-pole; 1,50 mm²; gray	www.wago.com/2020-112/125-000
	Item no.: 2020-112/135-000 1-conductor female plug; Strain relief plate; 1.5 mm²; 12-pole; 1,50 mm²; gray	www.wago.com/2020-112/135-000
	Item no.: 2020-112/145-000 1-conductor female plug; Strain relief plate; 1.5 mm²; 12-pole; 1,50 mm²; gray	www.wago.com/2020-112/145-000
	Item no.: 2020-113 1-conductor female plug; 1.5 mm²; 13-pole; 1,50 mm²; gray	www.wago.com/2020-113
	Item no.: 2020-113/000-036 1-conductor female plug; 1.5 mm²; 13-pole; 1,50 mm²; gray, green-yellow	www.wago.com/2020-113/000-036
	Item no.: 2020-113/000-037 1-conductor female plug; 1.5 mm²; 13-pole; 1,50 mm²; green-yellow, gray	www.wago.com/2020-113/000-037
	Item no.: 2020-113/000-038 1-conductor female plug; 1.5 mm²; 13-pole; 1,50 mm²; gray, blue, green-yellow	www.wago.com/2020-113/000-038

Subject to changes. Please also observe the further product documentation!

WAGO Kontakttechnik GmbH & Co. KG
Hansastr. 27
32423 Minden
Phone: +49571 887-0 | Fax: +49571 887-169
Email: info.de@wago.com | Web: www.wago.com

Do you have any questions about our products?
We are always happy to take your call at +49 (571) 887-44222.

Item no.: 2020-113/000-039 1-conductor female plug; 1.5 mm²; 13-pole; 1,50 mm²; green-yellow, blue, gray	www.wago.com/2020-113/000-039
Item no.: 2020-113/125-000 1-conductor female plug; Locking lever; 1.5 mm²; 13-pole; 1,50 mm²; gray	www.wago.com/2020-113/125-000
Item no.: 2020-113/135-000 1-conductor female plug; Strain relief plate; 1.5 mm²; 13-pole; 1,50 mm²; gray	www.wago.com/2020-113/135-000
Item no.: 2020-113/145-000 1-conductor female plug; Strain relief plate; 1.5 mm²; 13-pole; 1,50 mm²; gray	www.wago.com/2020-113/145-000
Item no.: 2020-114 1-conductor female plug; 1.5 mm²; 14-pole; 1,50 mm²; gray	www.wago.com/2020-114
Item no.: 2020-114/000-036 1-conductor female plug; 1.5 mm²; 14-pole; 1,50 mm²; gray, green-yellow	www.wago.com/2020-114/000-036
Item no.: 2020-114/000-037 1-conductor female plug; 1.5 mm²; 14-pole; 1,50 mm²; green-yellow, gray	www.wago.com/2020-114/000-037
Item no.: 2020-114/000-038 1-conductor female plug; 1.5 mm²; 14-pole; 1,50 mm²; gray, blue, green-yellow	www.wago.com/2020-114/000-038
Item no.: 2020-114/000-039 1-conductor female plug; 1.5 mm²; 14-pole; 1,50 mm²; green-yellow, blue, gray	www.wago.com/2020-114/000-039
Item no.: 2020-114/125-000 1-conductor female plug; Locking lever; 1.5 mm²; 14-pole; 1,50 mm²; gray	www.wago.com/2020-114/125-000
Item no.: 2020-114/135-000 1-conductor female plug; Strain relief plate; 1.5 mm²; 14-pole; 1,50 mm²; gray	www.wago.com/2020-114/135-000
Item no.: 2020-114/145-000 1-conductor female plug; Strain relief plate; 1.5 mm²; 14-pole; 1,50 mm²; gray	www.wago.com/2020-114/145-000
Item no.: 2020-115 1-conductor female plug; 1.5 mm²; 15-pole; 1,50 mm²; gray	www.wago.com/2020-115

Subject to changes. Please also observe the further product documentation!

WAGO Kontakttechnik GmbH & Co. KG
Hansastr. 27
32423 Minden
Phone: +49571 887-0 | Fax: +49571 887-169
Email: info.de@wago.com | Web: www.wago.com

Do you have any questions about our products?
We are always happy to take your call at +49 (571) 887-44222.

	Item no.: 2020-115/000-036 1-conductor female plug; 1.5 mm²; 15-pole; 1,50 mm²; gray, green-yellow	www.wago.com/2020-115/000-036
	Item no.: 2020-115/000-037 1-conductor female plug; 1.5 mm²; 15-pole; 1,50 mm²; green-yellow, gray	www.wago.com/2020-115/000-037
	Item no.: 2020-115/000-038 1-conductor female plug; 1.5 mm²; 15-pole; 1,50 mm²; gray, blue, green-yellow	www.wago.com/2020-115/000-038
	Item no.: 2020-115/000-039 1-conductor female plug; 1.5 mm²; 15-pole; 1,50 mm²; green-yellow, blue, gray	www.wago.com/2020-115/000-039
	Item no.: 2020-115/125-000 1-conductor female plug; Locking lever; 1.5 mm²; 15-pole; 1,50 mm²; gray	www.wago.com/2020-115/125-000
	Item no.: 2020-115/135-000 1-conductor female plug; Strain relief plate; 1.5 mm²; 15-pole; 1,50 mm²; gray	www.wago.com/2020-115/135-000
	Item no.: 2020-115/145-000 1-conductor female plug; Strain relief plate; 1.5 mm²; 15-pole; 1,50 mm²; gray	www.wago.com/2020-115/145-000
	Item no.: 2020-161 Start module for 1-conductor female connector; with integrated end plate; 1.5 mm²; 1-pole; 1,50 mm²; gray	www.wago.com/2020-161
	Item no.: 2020-164 Start module for 1-conductor female connector; with integrated end plate; 1.5 mm²; 1-pole; 1,50 mm²; blue	www.wago.com/2020-164
	Item no.: 2020-167 Start module for 1-conductor female connector; 1.5 mm²; 1-pole; 1,50 mm²; green-yellow	www.wago.com/2020-167
	Item no.: 2020-181 End module for 1-conductor female connector; 1.5 mm²; 1-pole; 1,50 mm²; gray	www.wago.com/2020-181
	Item no.: 2020-184 End module for 1-conductor female connector; 1.5 mm²; 1-pole; 1,50 mm²; blue	www.wago.com/2020-184
	Item no.: 2020-187 End module for 1-conductor female connector; 1.5 mm²; 1-pole; 1,50 mm²; green-yellow	www.wago.com/2020-187
	Item no.: 2020-202 2-conductor female connector; 1.5 mm²; 2-pole; 1,50 mm²; gray	www.wago.com/2020-202
	Item no.: 2020-203 2-conductor female connector; 1.5 mm²; 3-pole; 1,50 mm²; gray	www.wago.com/2020-203

Subject to changes. Please also observe the further product documentation!

WAGO Kontakttechnik GmbH & Co. KG
Hansastr. 27
32423 Minden
Phone: +49571 887-0 | Fax: +49571 887-169
Email: info.de@wago.com | Web: www.wago.com

Do you have any questions about our products?
We are always happy to take your call at +49 (571) 887-44222.

	Item no.: 2020-203/000-036 2-conductor female connector; 1.5 mm²; 3-pole; 1,50 mm²; gray, green-yellow	www.wago.com/2020-203/000-036
	Item no.: 2020-203/000-037 2-conductor female connector; 1.5 mm²; 3-pole; 1,50 mm²; green-yellow, gray	www.wago.com/2020-203/000-037
	Item no.: 2020-203/000-038 2-conductor female connector; 1.5 mm²; 3-pole; 1,50 mm²; gray, blue, green-yellow	www.wago.com/2020-203/000-038
	Item no.: 2020-203/000-039 2-conductor female connector; 1.5 mm²; 3-pole; 1,50 mm²; green-yellow, blue, gray	www.wago.com/2020-203/000-039
	Item no.: 2020-204 2-conductor female connector; 1.5 mm²; 4-pole; 1,50 mm²; gray	www.wago.com/2020-204
	Item no.: 2020-204/000-036 2-conductor female connector; 1.5 mm²; 4-pole; 1,50 mm²; gray, green-yellow	www.wago.com/2020-204/000-036
	Item no.: 2020-204/000-037 2-conductor female connector; 1.5 mm²; 4-pole; 1,50 mm²; green-yellow, gray	www.wago.com/2020-204/000-037
	Item no.: 2020-204/000-038 2-conductor female connector; 1.5 mm²; 4-pole; 1,50 mm²; gray, blue, green-yellow	www.wago.com/2020-204/000-038
	Item no.: 2020-204/000-039 2-conductor female connector; 1.5 mm²; 4-pole; 1,50 mm²; green-yellow, blue, gray	www.wago.com/2020-204/000-039
	Item no.: 2020-205 2-conductor female connector; 1.5 mm²; 5-pole; 1,50 mm²; gray	www.wago.com/2020-205
	Item no.: 2020-205/000-036 2-conductor female connector; 1.5 mm²; 5-pole; 1,50 mm²; gray, green-yellow	www.wago.com/2020-205/000-036
	Item no.: 2020-205/000-037 2-conductor female connector; 1.5 mm²; 5-pole; 1,50 mm²; green-yellow, gray	www.wago.com/2020-205/000-037
	Item no.: 2020-205/000-038 2-conductor female connector; 1.5 mm²; 5-pole; 1,50 mm²; gray, blue, green-yellow	www.wago.com/2020-205/000-038
	Item no.: 2020-205/000-039 2-conductor female connector; 1.5 mm²; 5-pole; 1,50 mm²; green-yellow, blue, gray	www.wago.com/2020-205/000-039

Subject to changes. Please also observe the further product documentation!

WAGO Kontakttechnik GmbH & Co. KG
Hansastr. 27
32423 Minden
Phone: +49571 887-0 | Fax: +49571 887-169
Email: info.de@wago.com | Web: www.wago.com

Do you have any questions about our products?
We are always happy to take your call at +49 (571) 887-44222.

	Item no.: 2020-206 2-conductor female connector; 1.5 mm²; 6-pole; 1,50 mm²; gray	www.wago.com/2020-206
	Item no.: 2020-206/000-036 2-conductor female connector; 1.5 mm²; 6-pole; 1,50 mm²; gray, green-yellow	www.wago.com/2020-206/000-036
	Item no.: 2020-206/000-037 2-conductor female connector; 1.5 mm²; 6-pole; 1,50 mm²; green-yellow, gray	www.wago.com/2020-206/000-037
	Item no.: 2020-206/000-038 2-conductor female connector; 1.5 mm²; 6-pole; 1,50 mm²; gray, blue, green-yellow	www.wago.com/2020-206/000-038
	Item no.: 2020-206/000-039 2-conductor female connector; 1.5 mm²; 6-pole; 1,50 mm²; green-yellow, blue, gray	www.wago.com/2020-206/000-039
	Item no.: 2020-207 2-conductor female connector; 1.5 mm²; 7-pole; 1,50 mm²; gray	www.wago.com/2020-207
	Item no.: 2020-207/000-036 2-conductor female connector; 1.5 mm²; 7-pole; 1,50 mm²; gray, green-yellow	www.wago.com/2020-207/000-036
	Item no.: 2020-207/000-037 2-conductor female connector; 1.5 mm²; 7-pole; 1,50 mm²; green-yellow, gray	www.wago.com/2020-207/000-037
	Item no.: 2020-207/000-038 2-conductor female connector; 1.5 mm²; 7-pole; 1,50 mm²; gray, blue, green-yellow	www.wago.com/2020-207/000-038
	Item no.: 2020-207/000-039 2-conductor female connector; 1.5 mm²; 7-pole; 1,50 mm²; green-yellow, blue, gray	www.wago.com/2020-207/000-039
	Item no.: 2020-208 2-conductor female connector; 1.5 mm²; 8-pole; 1,50 mm²; gray	www.wago.com/2020-208
	Item no.: 2020-208/000-036 2-conductor female connector; 1.5 mm²; 8-pole; 1,50 mm²; gray, green-yellow	www.wago.com/2020-208/000-036
	Item no.: 2020-208/000-037 2-conductor female connector; 1.5 mm²; 8-pole; 1,50 mm²; green-yellow, gray	www.wago.com/2020-208/000-037
	Item no.: 2020-208/000-038 2-conductor female connector; 1.5 mm²; 8-pole; 1,50 mm²; gray, blue, green-yellow	www.wago.com/2020-208/000-038

Subject to changes. Please also observe the further product documentation!

WAGO Kontakttechnik GmbH & Co. KG
Hansastr. 27
32423 Minden
Phone: +49571 887-0 | Fax: +49571 887-169
Email: info.de@wago.com | Web: www.wago.com

Do you have any questions about our products?
We are always happy to take your call at +49 (571) 887-44222.

	Item no.: 2020-208/000-039 2-conductor female connector; 1.5 mm²; 8-pole; 1,50 mm²; green-yellow, blue, gray	www.wago.com/2020-208/000-039
	Item no.: 2020-209 2-conductor female connector; 1.5 mm²; 9-pole; 1,50 mm²; gray	www.wago.com/2020-209
	Item no.: 2020-209/000-036 2-conductor female connector; 1.5 mm²; 9-pole; 1,50 mm²; gray, green-yellow	www.wago.com/2020-209/000-036
	Item no.: 2020-209/000-037 2-conductor female connector; 1.5 mm²; 9-pole; 1,50 mm²; green-yellow, gray	www.wago.com/2020-209/000-037
	Item no.: 2020-209/000-038 2-conductor female connector; 1.5 mm²; 9-pole; 1,50 mm²; gray, blue, green-yellow	www.wago.com/2020-209/000-038
	Item no.: 2020-209/000-039 2-conductor female connector; 1.5 mm²; 9-pole; 1,50 mm²; green-yellow, blue, gray	www.wago.com/2020-209/000-039
	Item no.: 2020-210 2-conductor female connector; 1.5 mm²; 10-pole; 1,50 mm²; gray	www.wago.com/2020-210
	Item no.: 2020-210/000-036 2-conductor female connector; 1.5 mm²; 10-pole; 1,50 mm²; gray, green-yellow	www.wago.com/2020-210/000-036
	Item no.: 2020-210/000-037 2-conductor female connector; 1.5 mm²; 10-pole; 1,50 mm²; green-yellow, gray	www.wago.com/2020-210/000-037
	Item no.: 2020-210/000-038 2-conductor female connector; 1.5 mm²; 10-pole; 1,50 mm²; gray, blue, green-yellow	www.wago.com/2020-210/000-038
	Item no.: 2020-210/000-039 2-conductor female connector; 1.5 mm²; 10-pole; 1,50 mm²; green-yellow, blue, gray	www.wago.com/2020-210/000-039
	Item no.: 2020-211 2-conductor female connector; 1.5 mm²; 11-pole; 1,50 mm²; gray	www.wago.com/2020-211
	Item no.: 2020-211/000-036 2-conductor female connector; 1.5 mm²; 11-pole; 1,50 mm²; gray, green-yellow	www.wago.com/2020-211/000-036
	Item no.: 2020-211/000-037 2-conductor female connector; 1.5 mm²; 11-pole; 1,50 mm²; green-yellow, gray	www.wago.com/2020-211/000-037

Subject to changes. Please also observe the further product documentation!

WAGO Kontakttechnik GmbH & Co. KG
Hansastr. 27
32423 Minden
Phone: +49571 887-0 | Fax: +49571 887-169
Email: info.de@wago.com | Web: www.wago.com

Do you have any questions about our products?
We are always happy to take your call at +49 (571) 887-44222.

	Item no.: 2020-211/000-038 2-conductor female connector; 1.5 mm²; 11-pole; 1,50 mm²; gray, blue, green-yellow	www.wago.com/2020-211/000-038
	Item no.: 2020-211/000-039 2-conductor female connector; 1.5 mm²; 11-pole; 1,50 mm²; green-yellow, blue, gray	www.wago.com/2020-211/000-039
	Item no.: 2020-212 2-conductor female connector; 1.5 mm²; 12-pole; 1,50 mm²; gray	www.wago.com/2020-212
	Item no.: 2020-212/000-036 2-conductor female connector; 1.5 mm²; 12-pole; 1,50 mm²; gray, green-yellow	www.wago.com/2020-212/000-036
	Item no.: 2020-212/000-037 2-conductor female connector; 1.5 mm²; 12-pole; 1,50 mm²; green-yellow, gray	www.wago.com/2020-212/000-037
	Item no.: 2020-212/000-038 2-conductor female connector; 1.5 mm²; 12-pole; 1,50 mm²; gray, blue, green-yellow	www.wago.com/2020-212/000-038
	Item no.: 2020-212/000-039 2-conductor female connector; 1.5 mm²; 12-pole; 1,50 mm²; green-yellow, blue, gray	www.wago.com/2020-212/000-039
	Item no.: 2020-213 2-conductor female connector; 1.5 mm²; 13-pole; 1,50 mm²; gray	www.wago.com/2020-213
	Item no.: 2020-213/000-036 2-conductor female connector; 1.5 mm²; 13-pole; 1,50 mm²; gray, green-yellow	www.wago.com/2020-213/000-036
	Item no.: 2020-213/000-037 2-conductor female connector; 1.5 mm²; 13-pole; 1,50 mm²; green-yellow, gray	www.wago.com/2020-213/000-037
	Item no.: 2020-213/000-038 2-conductor female connector; 1.5 mm²; 13-pole; 1,50 mm²; gray, blue, green-yellow	www.wago.com/2020-213/000-038
	Item no.: 2020-213/000-039 2-conductor female connector; 1.5 mm²; 13-pole; 1,50 mm²; green-yellow, blue, gray	www.wago.com/2020-213/000-039
	Item no.: 2020-214 2-conductor female connector; 1.5 mm²; 14-pole; 1,50 mm²; gray	www.wago.com/2020-214
	Item no.: 2020-214/000-036 2-conductor female connector; 1.5 mm²; 14-pole; 1,50 mm²; gray, green-yellow	www.wago.com/2020-214/000-036

Subject to changes. Please also observe the further product documentation!

WAGO Kontakttechnik GmbH & Co. KG
Hansastr. 27
32423 Minden
Phone: +49571 887-0 | Fax: +49571 887-169
Email: info.de@wago.com | Web: www.wago.com

Do you have any questions about our products?
We are always happy to take your call at +49 (571) 887-44222.

	Item no.: 2020-214/000-037 2-conductor female connector; 1.5 mm²; 14-pole; 1,50 mm²; green-yellow, gray	www.wago.com/2020-214/000-037
	Item no.: 2020-214/000-038 2-conductor female connector; 1.5 mm²; 14-pole; 1,50 mm²; gray, blue, green-yellow	www.wago.com/2020-214/000-038
	Item no.: 2020-214/000-039 2-conductor female connector; 1.5 mm²; 14-pole; 1,50 mm²; green-yellow, blue, gray	www.wago.com/2020-214/000-039
	Item no.: 2020-215 2-conductor female connector; 1.5 mm²; 15-pole; 1,50 mm²; gray	www.wago.com/2020-215
	Item no.: 2020-215/000-036 2-conductor female connector; 1.5 mm²; 15-pole; 1,50 mm²; gray, green-yellow	www.wago.com/2020-215/000-036
	Item no.: 2020-215/000-037 2-conductor female connector; 1.5 mm²; 15-pole; 1,50 mm²; green-yellow, gray	www.wago.com/2020-215/000-037
	Item no.: 2020-215/000-038 2-conductor female connector; 1.5 mm²; 15-pole; 1,50 mm²; gray, blue, green-yellow	www.wago.com/2020-215/000-038
	Item no.: 2020-215/000-039 2-conductor female connector; 1.5 mm²; 15-pole; 1,50 mm²; green-yellow, blue, gray	www.wago.com/2020-215/000-039
	Item no.: 2020-261 Start module for 2-conductor female connector; with integrated end plate; 1.5 mm²; 1-pole; 1,50 mm²; gray	www.wago.com/2020-261
	Item no.: 2020-264 Start module for 2-conductor female connector; with integrated end plate; 1.5 mm²; 1-pole; 1,50 mm²; blue	www.wago.com/2020-264
	Item no.: 2020-267 Start module for 2-conductor female connector; 1.5 mm²; 1-pole; 1,50 mm²; green-yellow	www.wago.com/2020-267
	Item no.: 2020-281 End module for 2-conductor female connector; 1.5 mm²; 1-pole; 1,50 mm²; gray	www.wago.com/2020-281
	Item no.: 2020-284 End module for 2-conductor female connector; 1.5 mm²; 1-pole; 1,50 mm²; blue	www.wago.com/2020-284
	Item no.: 2020-287 End module for 2-conductor female connector; 1.5 mm²; 1-pole; 1,50 mm²; green-yellow	www.wago.com/2020-287
Carrier rail		
	Item no.: 210-112 Steel carrier rail; 35 x 7.5 mm; 1 mm thick; 2 m long; slotted; according to EN 60715; "Hole width 25 mm; silver-colored	www.wago.com/210-112

Subject to changes. Please also observe the further product documentation!

WAGO Kontakttechnik GmbH & Co. KG
Hansastr. 27
32423 Minden
Phone: +49571 887-0 | Fax: +49571 887-169
Email: info.de@wago.com | Web: www.wago.com

Do you have any questions about our products?
We are always happy to take your call at +49 (571) 887-44222.

	Item no.: 210-113 Steel carrier rail; 35 x 7.5 mm; 1 mm thick; 2 m long; unslotted; according to EN 60715; silver-colored	www.wago.com/210-113
	Item no.: 210-114 Steel carrier rail; 35 x 15 mm; 1.5 mm thick; 2 m long; unslotted; similar to EN 60715; silver-colored	www.wago.com/210-114
	Item no.: 210-115 Steel carrier rail; 35 x 7.5 mm; 1 mm thick; 2 m long; slotted; according to EN 60715; "Hole width 18 mm; silver-colored	www.wago.com/210-115
	Item no.: 210-118 Steel carrier rail; 35 x 15 mm; 2.3 mm thick; 2 m long; unslotted; according to EN 60715; silver-colored	www.wago.com/210-118
	Item no.: 210-196 Aluminum carrier rail; 35 x 8.2 mm; 1.6 mm thick; 2 m long; unslotted; similar to EN 60715; silver-colored	www.wago.com/210-196
	Item no.: 210-197 Steel carrier rail; 35 x 15 mm; 1.5 mm thick; 2 m long; slotted; similar to EN 60715; silver-colored	www.wago.com/210-197
	Item no.: 210-198 Copper carrier rail; 35 x 15 mm; 2.3 mm thick; 2 m long; unslotted; according to EN 60715; copper-colored	www.wago.com/210-198
Coding		
	Item no.: 2020-100 Carrier with 6 coding pins; for coding of female plugs; for carrier terminal blocks; orange	www.wago.com/2020-100
Marking accessories		
	Item no.: 2000-121 Adaptor; gray	www.wago.com/2000-121
	Item no.: 2009-110 Marking strips; for Smart Printer; on reel; not stretchable; plain; snap-on type; white	www.wago.com/2009-110
	Item no.: 2009-113 WMB-Inline; for Smart Printer; 2300 pieces on roll; plain; snap-on type; white	www.wago.com/2009-113
	Item no.: 2009-113/000-002 WMB-Inline; for Smart Printer; 2300 pieces on roll; plain; snap-on type; yellow	www.wago.com/2009-113/000-002
	Item no.: 2009-113/000-005 WMB-Inline; for Smart Printer; 2300 pieces on roll; plain; snap-on type; red	www.wago.com/2009-113/000-005
	Item no.: 2009-113/000-006 WMB-Inline; for Smart Printer; 2300 pieces on roll; plain; snap-on type; blue	www.wago.com/2009-113/000-006
	Item no.: 2009-113/000-007 WMB-Inline; for Smart Printer; 2300 pieces on roll; plain; snap-on type; gray	www.wago.com/2009-113/000-007

Subject to changes. Please also observe the further product documentation!

WAGO Kontakttechnik GmbH & Co. KG
Hansastr. 27
32423 Minden
Phone: +49571 887-0 | Fax: +49571 887-169
Email: info.de@wago.com | Web: www.wago.com

Do you have any questions about our products?
We are always happy to take your call at +49 (571) 887-44222.

	Item no.: 2009-113/000-012 WMB-Inline; for Smart Printer; 2300 pieces on roll; plain; snap-on type; orange	www.wago.com/2009-113/000-012
	Item no.: 2009-113/000-017 WMB-Inline; for Smart Printer; 2300 pieces on roll; plain; snap-on type; light green	www.wago.com/2009-113/000-017
	Item no.: 2009-113/000-023 WMB-Inline; for Smart Printer; 2300 pieces on roll; plain; snap-on type; green	www.wago.com/2009-113/000-023
	Item no.: 2009-113/000-024 WMB-Inline; for Smart Printer; 2300 pieces on roll; plain; snap-on type; violet	www.wago.com/2009-113/000-024
	Item no.: 2009-191 Group marker carrier	www.wago.com/2009-191
	Item no.: 793-3501 WMB marking card; as card; plain; snap-on type; white	www.wago.com/793-3501

Downloads

Documentation

Bid Text

2020-5417/1102-950 X81 - Datei	19. 2. 2019	xml 4.3 kB	Download
2020-5417/1102-950 docx - Datei	7. 8. 2018	docx 15.5 kB	Download

Additional Information

Technical explanations	3. 4. 2019	pdf 2.2 MB	Download

CAD/CAE-Data

CAD data

2D/3D Models 2020-5417/1102-950	URL	Download

CAE data

ZUKEN Portal 2020-5417/1102-950	URL	Download

Subject to changes. Please also observe the further product documentation!

WAGO Kontakttechnik GmbH & Co. KG
Hansastr. 27
32423 Minden
Phone: +49571 887-0 | Fax: +49571 887-169
Email: info.de@wago.com | Web: www.wago.com

Do you have any questions about our products?
We are always happy to take your call at +49 (571) 887-44222.

Environmental Product Compliance

Compliance Search

Environmental Product Compliance 2020-5417/1102-950 4-conductor sensor terminal block; LED (yellow); for PNP-(high-side) switching sensors; with ground contact; with pluggable signal level; 1 mm²; Push-in CAGE CLAMP®; 1,00 mm²; gray	URL	Download

Installation Notes

Installation

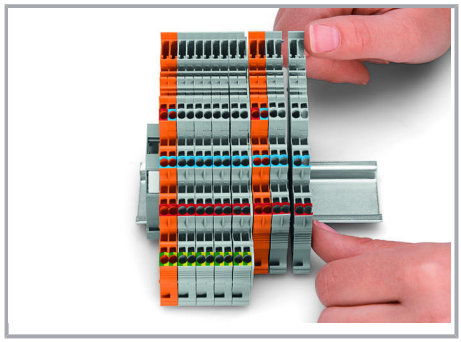

Snap individual terminal blocks onto the DIN-rail and slide together.

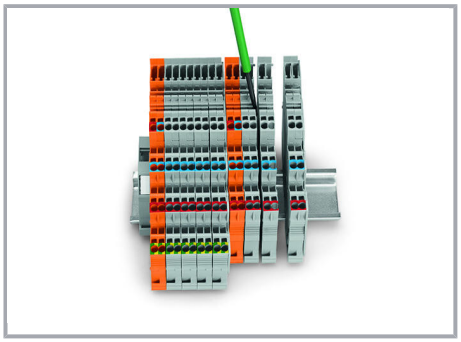

Separate terminal block assembly and slide individual terminal blocks laterally using an operating tool.

Testing

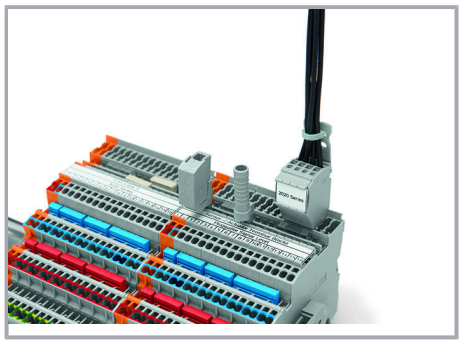

Testing via testing tap (2009-182) or test plug adapter (2009-174) (up to max. 42 V).

Coding

Subject to changes. Please also observe the further product documentation!

WAGO Kontakttechnik GmbH & Co. KG
Hansastr. 27
32423 Minden
Phone: +49571 887-0 | Fax: +49571 887-169
Email: info.de@wago.com | Web: www.wago.com

Do you have any questions about our products?
We are always happy to take your call at +49 (571) 887-44222.

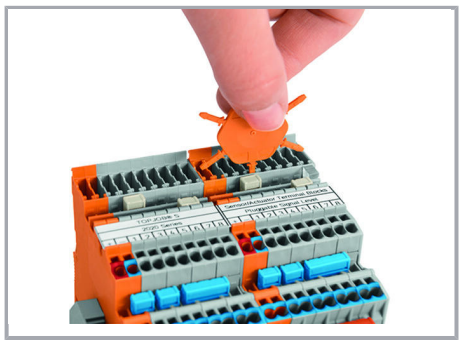

Insert coding pin into the corresponding slot and twist it off.

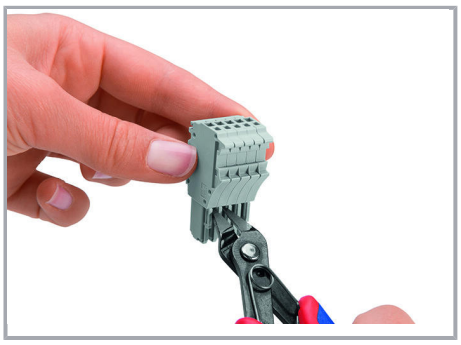

Remove the coding finger using a cutting tool.

Locking system

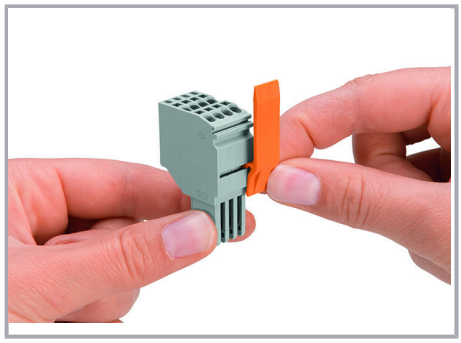

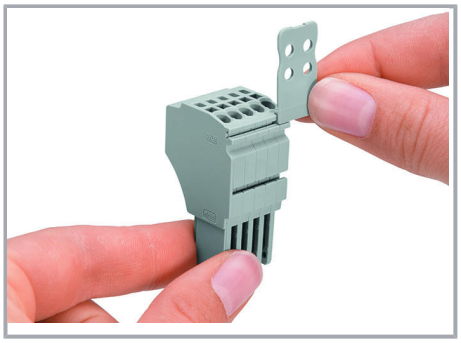

Slide the locking lever into position.

Strain relief

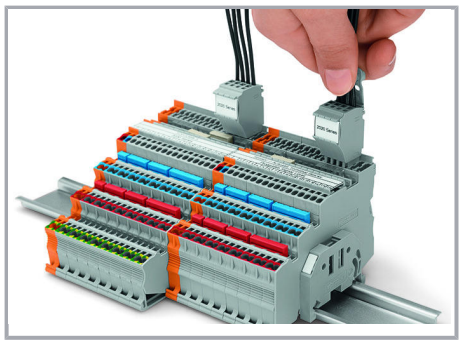

Removing a female plug via conductor bundle provided with strain relief plate.

Marking

WAGO Kontakttechnik GmbH & Co. KG
Hansastr. 27
32423 Minden
Phone: +49571 887-0 | Fax: +49571 887-169
Email: info.de@wago.com | Web: www.wago.com

Do you have any questions about our products?
We are always happy to take your call at +49 (571) 887-44222.

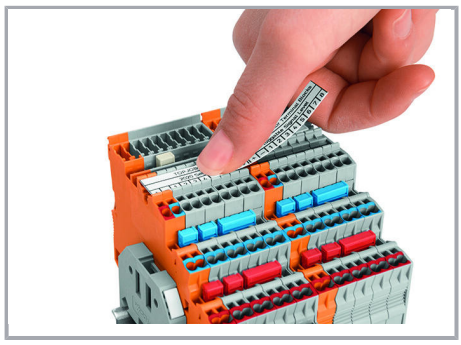

Labeling terminal blocks via marking strips (2009-110) or 3.5 mm wide WMB markers (793-35xx) – from the top or the side.

Product family

TOPJOB® S

TOPJOB® S: In various industrial applications and modern building installations, WAGO's wide and versatile range of rail-mount terminal blocks provides more than just reliable electrical connections.

Show all products from the family

Subject to changes. Please also observe the further product documentation!

WAGO Kontakttechnik GmbH & Co. KG
Hansastr. 27
32423 Minden
Phone: +49571 887-0 | Fax: +49571 887-169
Email: info.de@wago.com | Web: www.wago.com

Do you have any questions about our products?
We are always happy to take your call at +49 (571) 887-44222.