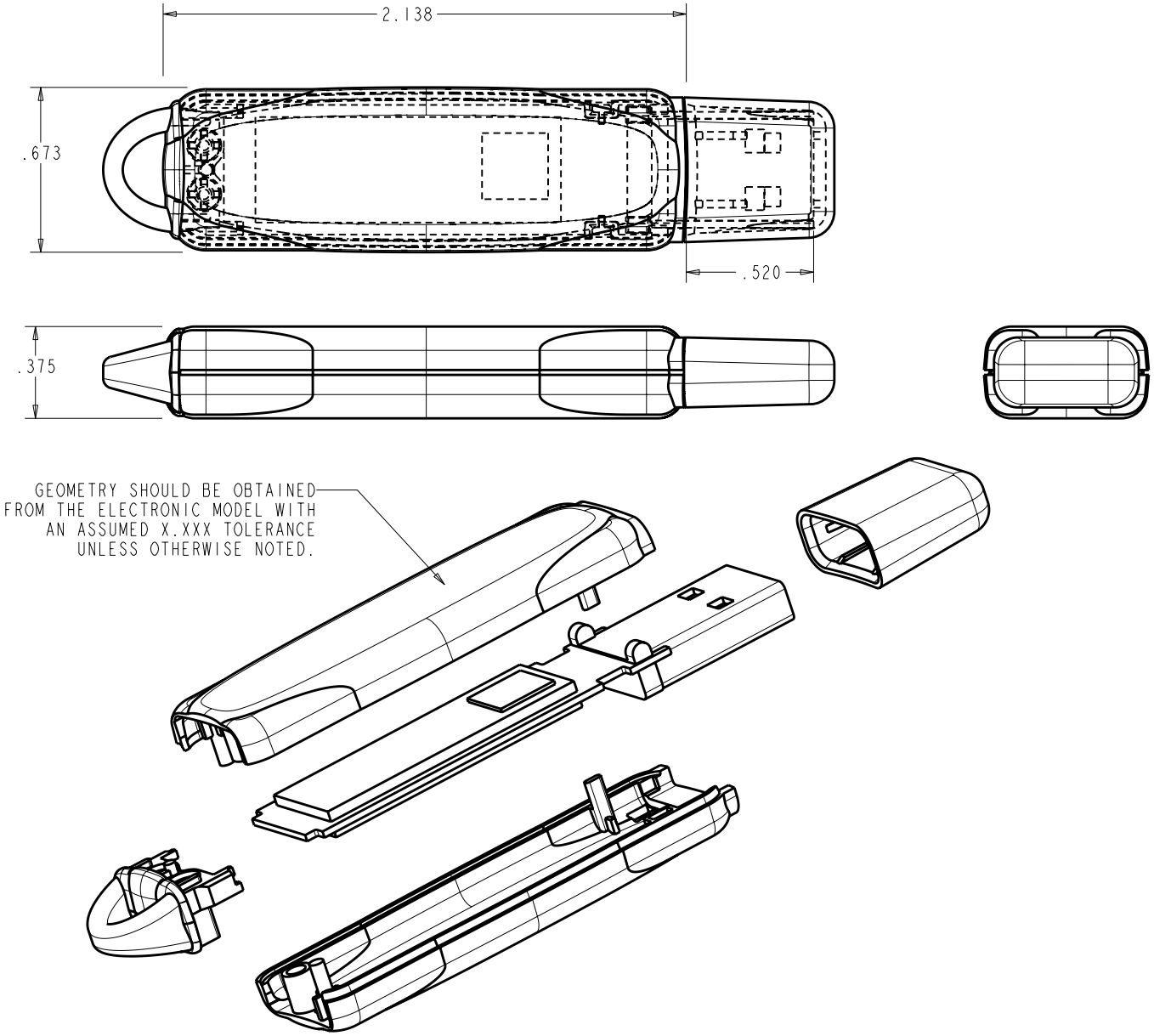

DIMENSIONS [inch]

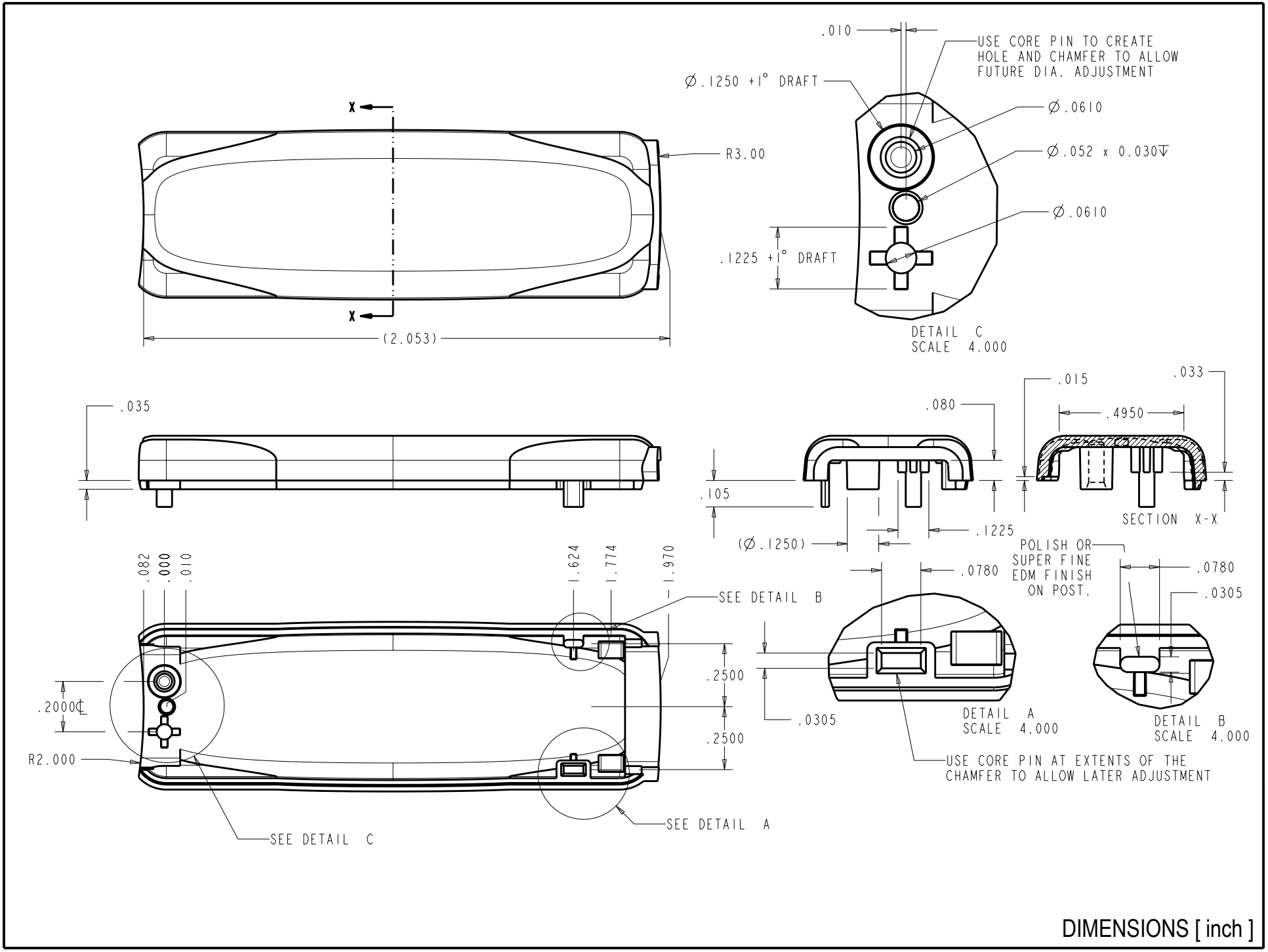

DIMENSIONS [inch]

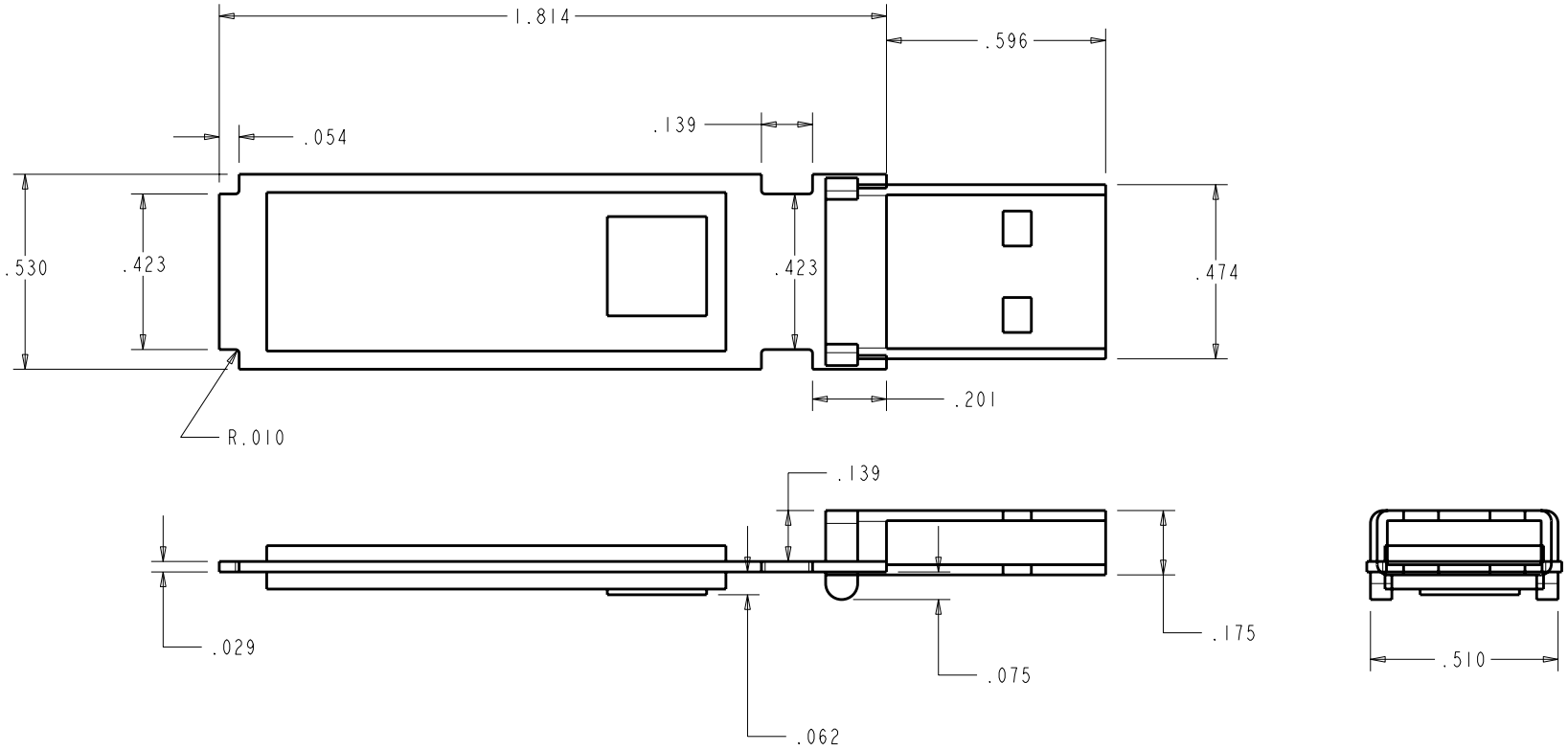

DIMENSIONS [inch]

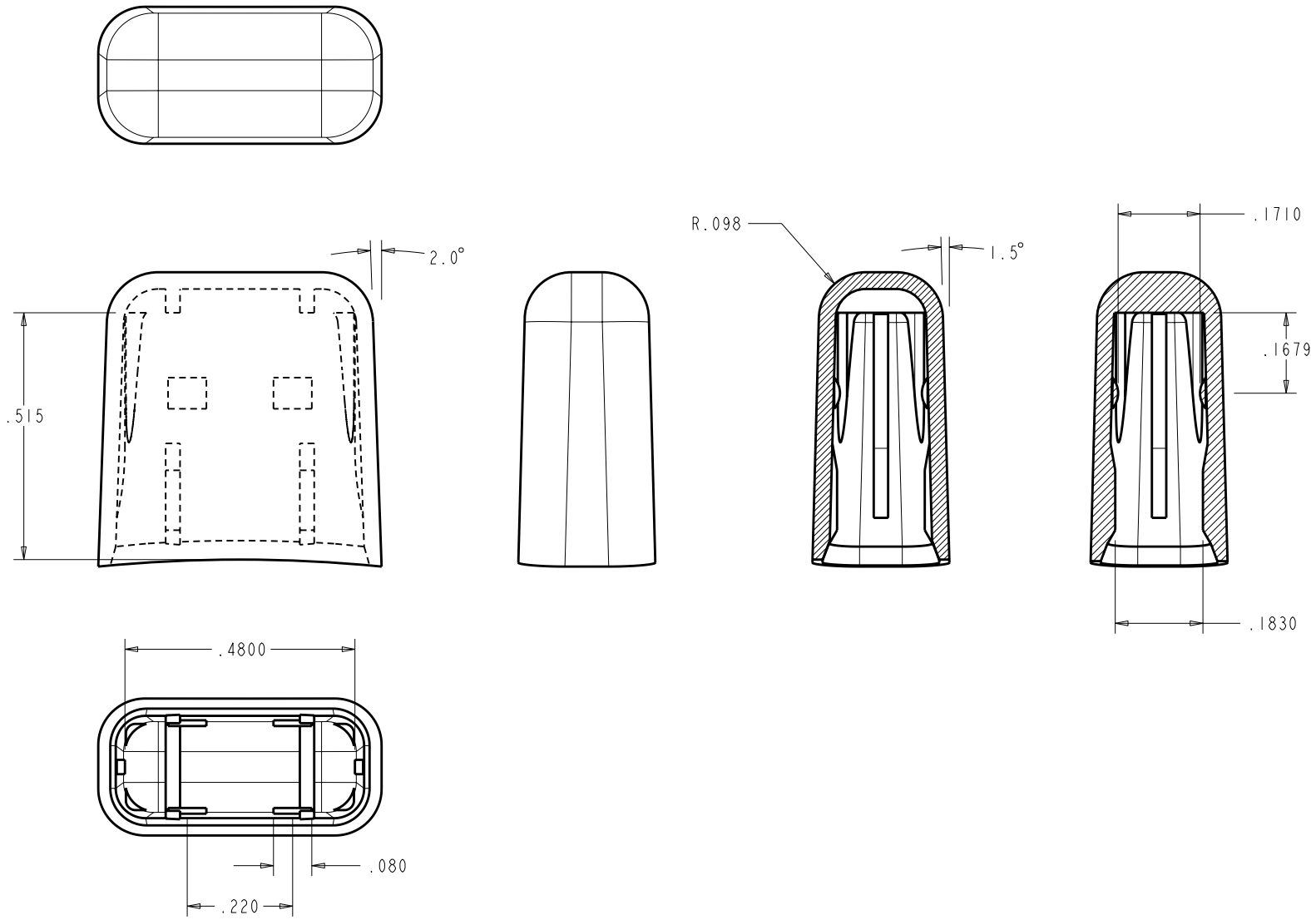

DIMENSIONS [inch]

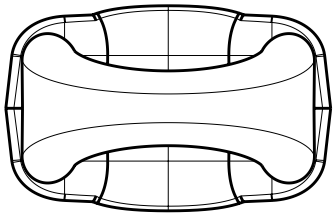

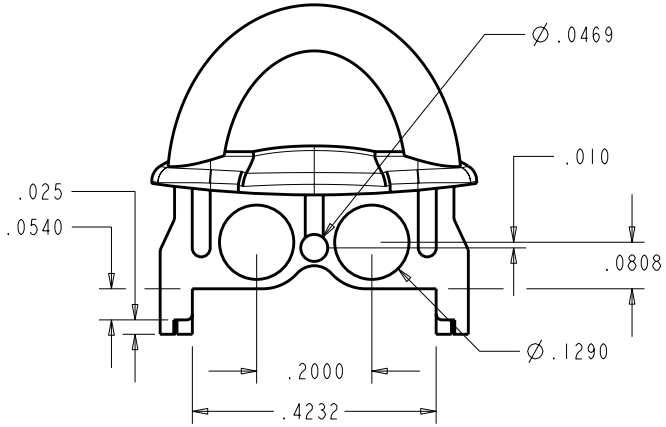

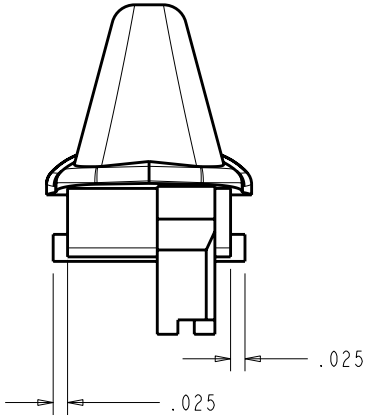

CRITICAL DIMENSIONS:
SAME AS END W/ RING

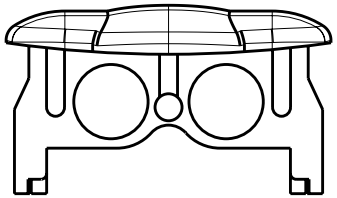

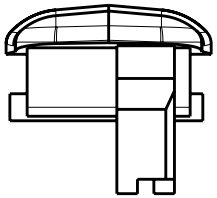

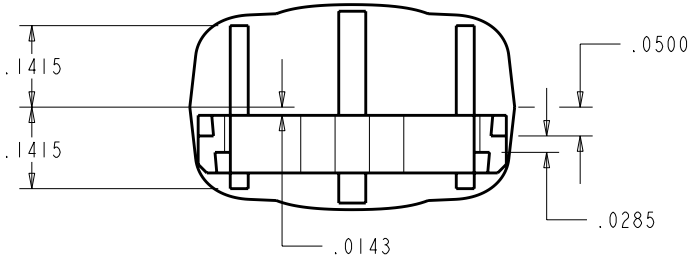

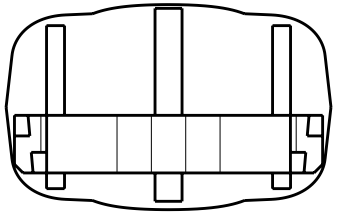

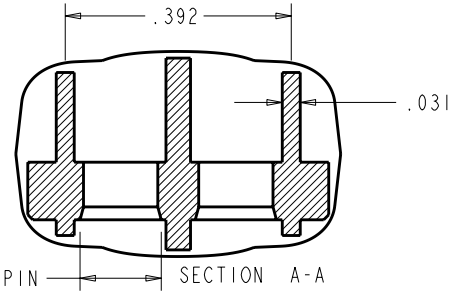

USE Ø.1410 CORE PIN

SECTION A-A

DIMENSIONS [inch]