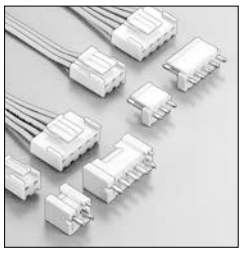

VH CONNECTOR

3.96 mm pitch/Disconnectable Crimp style connectors

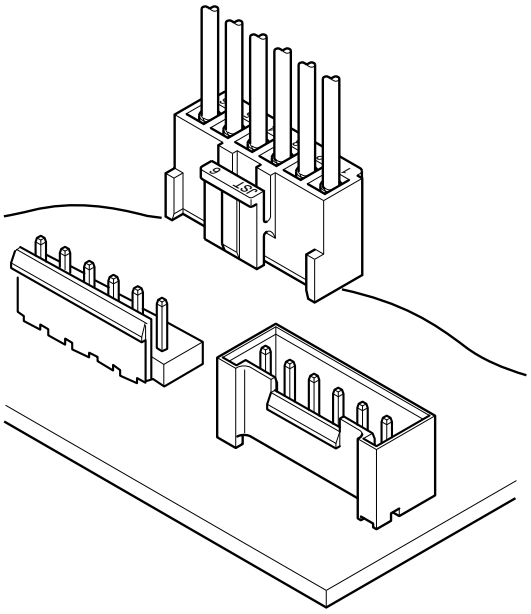

This small, field-proven connector for printed circuit boards is reliable and has a large current carrying capacity. It can be used with a wide variety of signal, power supply, and output circuits that appear in consumer electronic products.

- **Proven box contact**
- **Compact connector with a large capacity**
- **Secure contact and mounting**

Specifications

- Current rating: 10 A AC/DC (AWG #16)
- Voltage rating: 250 V AC/DC
- Temperature range: −25℃ to +85℃
  (including temperature rise in applying electrical current)
- Contact resistance: Initial value/ 10 mΩ max.
  After environmental tests/ 20 mΩ max.
- Insulation resistance: 1,000 MΩ min.
- Withstanding voltage: 1,500 VAC/minute
- Applicable wire: AWG #22 to #16
- Applicable PC board thickness: 1.6 mm

Note:
Do not branch in parallel current which exceeds the rated current. If branched in parallel, current imbalance or other problems may develop. If it is absolutely necessary to branch such a large current in parallel, be sure to use contacts made of phosphor bronze. Design the circuits without causing imbalance and provide an extra margin for each circuit.

* In using the products, refer to "Handling Precautions for Terminals and Connectors" described on our website (Technical documents of Product information page).
* RoHS2 compliance
* Dimensional unit: mm
* Contact JST for details.

Standards

Recognized E60389
Certified LR20812
R75122

PC board layout and Assembly layout

Locking header
Top entry type

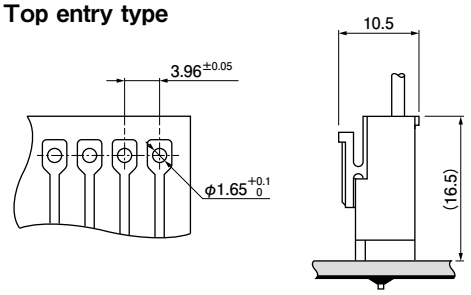

Locking header
Side entry type

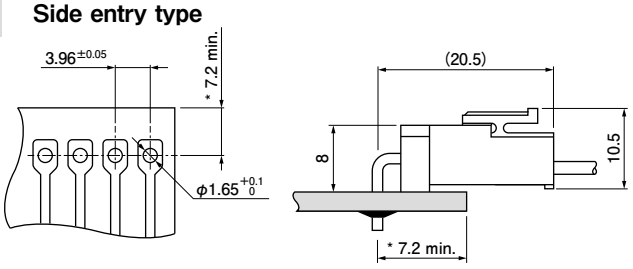

*11.0 max. when used with the VR connector receptacle.

Locking header
Side entry type with PCB stabilizer

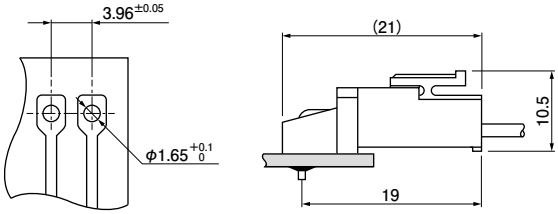

Shrouded header

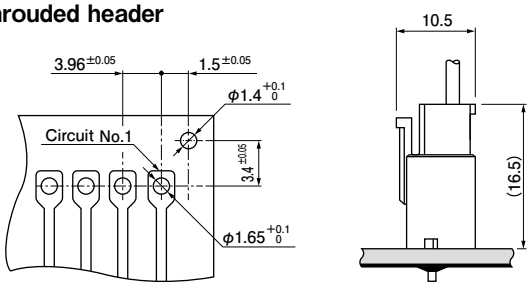

Note: 1. The above figure is the figure viewed from soldering side.
2. Tolerances are non-cumulative: ± 0.05 mm for all centers.
3. Please consider the pattern layout design in case of applying the large current.
4. Hole dimensions differ according to the type of PC board and piercing method. The dimensions above should serve as a guideline. Contact JST for details.

Contact

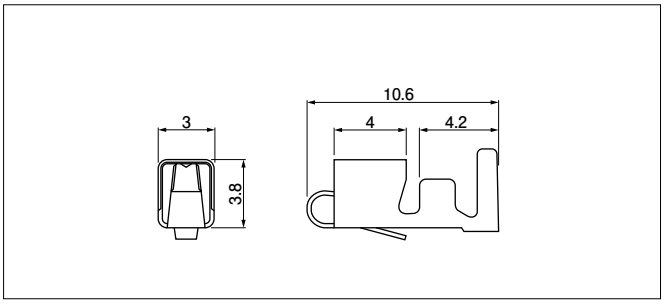

Model No.	Applicable wire		Insulation O.D. (mm)	Q'ty/reel
	mm²	AWG #		
SVH-21T-P1.1	0.33～0.83	22～18	1.7～3.0	4,500
SVH-41T-P1.1	0.5 ～1.25	20～16	1.7～3.0	3,500

Material and Finish
Phosphor bronze, tin-plated (reflow treatment)

RoHS2 compliance

Note: When using retainer mountable type housing, applicable wire's insulation O. D. shall be 1.7 to 2.2 mm.

Contact	Crimping machine	Applicator		
		Crimp applicator	Dies	Crimp applicator with dies
SVH-21T-P1.1	AP-K2N	MKS-L	MK/SVH-21-11	APLMK SVH21-11
SVH-41T-P1.1			MK/SVH-41-11	APLMK SVH41-11

Note: Contact JST for fully automatic crimping applicator.

Housing

N type

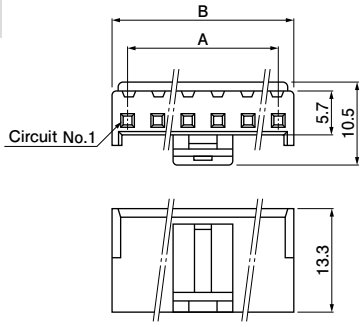

M type

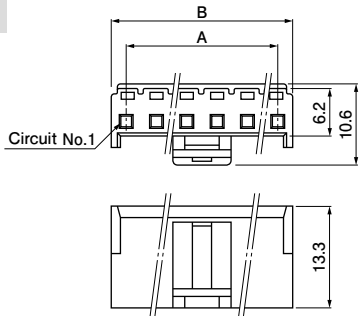

Retainer mountable type

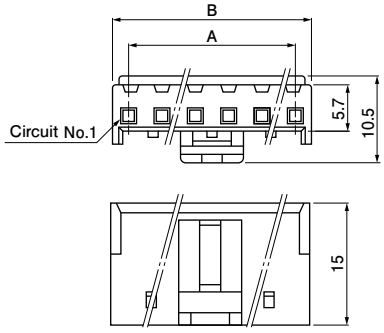

No. of circuits	Model No.			Dimensions (mm)		Q'ty/bag
	N type	M type	Retaine mountable type	A	B	
2	VHR-2N	VHR-2M	VHRR-2N	3.96	7.86	1,000
3	VHR-3N	VHR-3M	VHRR-3N	7.92	11.82	(*)
4	VHR-4N	VHR-4M	—	11.88	15.78	1,000
5	VHR-5N	VHR-5M	VHRR-5N	15.84	19.74	(*)
6	VHR-6N	VHR-6M	—	19.80	23.70	500
7	VHR-7N	VHR-7M	VHRR-7N	23.76	27.66	500
8	VHR-8N	—	VHRR-8N	27.72	31.62	500
9	VHR-9N	VHR-9M	VHRR-9N	31.68	35.58	500
10	VHR-10N	—	—	35.64	39.54	500
11	VHR-11N	—	—	39.60	43.50	500

Material and Finish
PA 6, UL94V-0, natural (white)

RoHS2 compliance

Note: 1. Models identified as VHR-( ) M incorporate measures to prevent electric shock and are thus safer in regard to high voltages.
2. The applicable housing for 2 circuits shrouded header is "VHR-2N" only. "VHRR-2N" is not applicable.
3. Contact JST for Glow Wire compliant connectors.

(*) N / M type ; 1,000
Retainer mountable type ; 500

<For reference> As the color identification,
the following alphabet shall be put in the underlined part.
For availability, delivery and minimum order quantity, contact JST.

ex. **VHR-2N-oo**
(blank)...natural (white)
BK...black R...red BL...blue M...green D...orange Y...yellow
PK...pink H...gray

Retainer

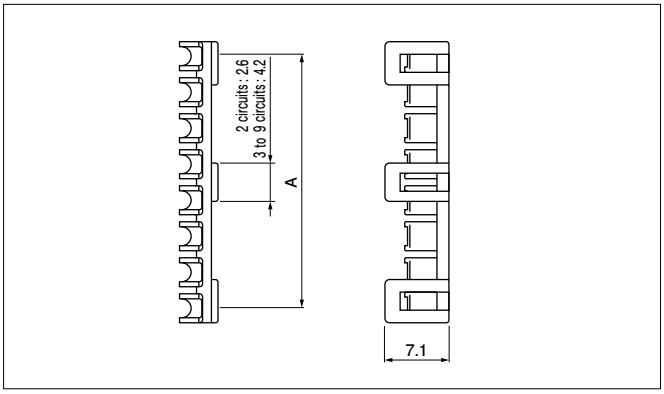

No. of circuits	Model No.	A	Q'ty/bag
2	VHS-2V	3.70	1,000
3	VHS-3V	7.52	1,000
5	VHS-5V	15.44	1,000
7	VHS-7V	23.36	1,000
8	VHS-8V	27.32	1,000
9	VHS-9V	31.28	1,000

Material and Finish
Glass-filled PA 66, UL94V-0, natural (ivory)

RoHS2 compliance

Locking header

Top entry type

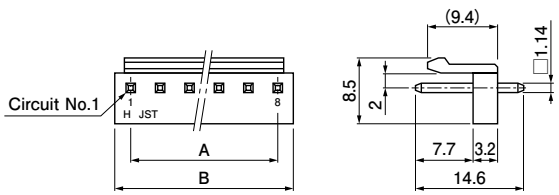

Side entry type

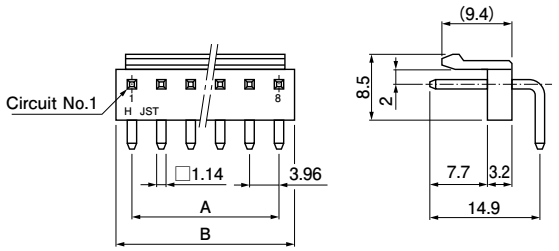

No. of circuits	Model No.		Dimensions (mm)		Q'ty/box	
	Top entry type	Side entry type	A	B	Top entry type	Side entry type
2	B2P-VH	B2PS-VH	3.96	7.86	1,000	1,000
3	B3P-VH	B3PS-VH	7.92	11.82	1,000	500
4	B4P-VH	B4PS-VH	11.88	15.78	500	500
5	B5P-VH	B5PS-VH	15.84	19.74	500	250
6	B6P-VH	B6PS-VH	19.80	23.70	250	250
7	B7P-VH	B7PS-VH	23.76	27.66	250	250
8	B8P-VH	B8PS-VH	27.72	31.62	200	200
9	B9P-VH	B9PS-VH	31.68	35.58	200	200
10	B10P-VH	B10PS-VH	35.64	39.54	200	100

Material and Finish
Post: Brass, copper-undercoated, tin-plated (reflow treatment) Wafer: PA 66, UL94V-0, natural (white)

RoHS2 compliance This product displays (LF)(SN) on a label.

Note: 1. Headers with a reduced number of posts are also available. Contact JST for details.
2. Contact JST for Glow Wire compliant connectors.

<For reference> As the color identification, the following alphabet shall be put in the underlined part. For availability, delivery and minimum order quantity, contact JST.

ex. **B2P(S)-VH-oo**

(blank)...natural (white)
BK...black R...red TR...tomato red BL...blue M...green
O...orange Y...yellow PK...pink H...gray

Top entry type of PBT

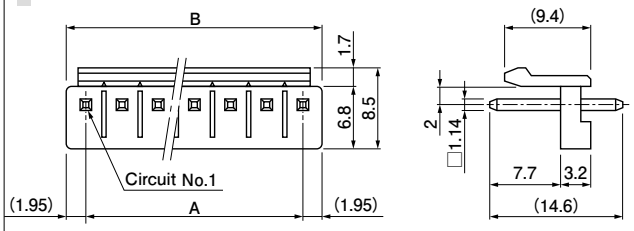

Side entry type with PCB stabilizer

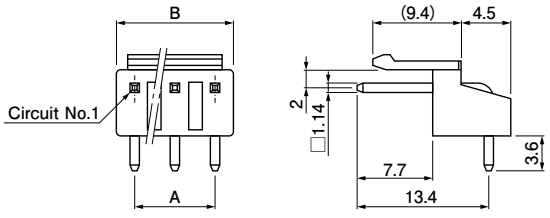

No. of circuits	Model No.		Dimensions (mm)		Q'ty/box	
	Top entry type of PBT	Side entry type with PCB stabilizer	A	B	Top entry type	Side entry type
2	B2P-VH-B	S2P-VH	3.96	7.86	1,000	1,000
3	B3P-VH-B	S3P-VH	7.92	11.82	1,000	500
4	B4P-VH-B	S4P-VH	11.88	15.78	500	500
5	B5P-VH-B	S5P-VH	15.84	19.74	500	250
6	B6P-VH-B	S6P-VH	19.80	23.70	250	250
7	B7P-VH-B	S7P-VH	23.76	27.66	250	250
8	B8P-VH-B	—	27.72	31.62	200	—
9	B9P-VH-B	—	31.68	35.58	200	—
10	B10P-VH-B	—	35.64	39.54	200	—
11	B11P-VH-B	—	39.60	43.50	200	—

Material and Finish
Post: Brass, copper-undercoated, tin-plated (reflow treatment) Wafer: Top entry type of PBT: Glass-filled PBT, UL94V-0, natural (white) Side entry type with PCB stabilizer: PA 66, UL94V-0, natural (white)

RoHS2 compliance This product displays (LF)(SN) on a label.

<For reference> As the color identification, the following alphabet shall be put in the underlined part. For availability, delivery and minimum order quantity, contact JST.

<Top entry type of PBT>

ex. **B2P-VH-B-oo**

(blank)...natural (white)
C...black R...red E...blue M...green Y...yellow

<Side entry type with PCB stabilizer>

ex. **S2P-VH-oo**

(blank)...natural (white)
BK...black R...red BL...blue M...green Y...yellow

Shrouded header

<2 , 3 circuits>

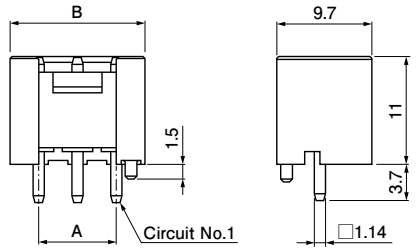

<4 to 10 circuits>

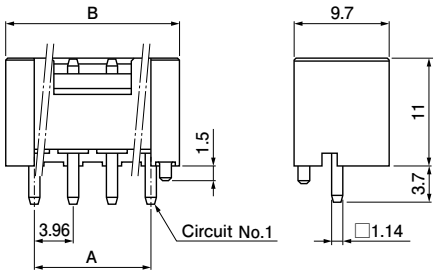

No. of circuits	Model No.	Dimensions (mm)		Q'ty/ box
		A	B	
2	**B2P-VH-FB-B**	3.96	9.80	250
3	**B3P-VH-FB-B**	7.92	13.76	200
4	**B4P-VH-FB-B**	11.88	17.72	150
5	**B5P-VH-FB-B**	15.84	21.68	200
6	**B6P-VH-FB-B**	19.80	25.64	200
7	**B7P-VH-FB-B**	23.76	29.60	100
8	**B8P-VH-FB-B**	27.72	33.56	100
9	**B9P-VH-FB-B**	31.68	37.52	100
10	**B10P-VH-FB-B**	35.64	41.48	125

Material and Finish
Post: Copper alloy, copper-undercoated, tin-plated (reflow treatment) Wafer: Glass-filled PBT, UL94V-0, natural (white)

RoHS2 compliance This product displays (LF)(SN) on a label.
Note: The applicable housing for 2 circuits shrouded header is "VHR-2N" only.
"VHRR-2N" is not applicable.

<For reference> As the color identification,
the following alphabet shall be put in the underlined part.
For availability, delivery and minimum order quantity, contact JST.

ex. **B2P-VH-FB-B-oo**
(blank)...natural (white)
C...black R...red E...blue M...green O...orange Y...yellow
PK...pink H...gray

Post-omitted Header

1) When giving the polarity to the product by removing the post (N-1)th circuit
However, since the product that the 2nd post of 3-circuit connector is omitted doesn't have polarity, select 3).

B *1 P *2 -VH

***1; No. of circuits (No. of posts)**
***2; Circuit No. of used original header**

e.g.)

Circuit No.	1	2	3	4	5	6	7
Circuit (post)	○	○	○	○	○	×	○
Model No.	B6P7-VH						

○; With circuit (post) ×; Without circuit (post)

2) When giving the polarity to the product by removing the post in 2nd circuit
However, since the product that the 2nd post of 3-circuit connector is omitted doesn't have polarity, select 3).

B *1 P *2 -VH-L

e.g.)

Circuit No.	1	2	3	4	5	6	7
Circuit (post)	○	×	○	○	○	○	○
Model No.	B6P7-VH-L						

3) When the pitch is set again
1. When setting two times of pitch with omitting every other one post
However, posts shall be inserted in No.1-circuit and No. N-circuit.

B *1 P *2 -VH

e.g.)

Circuit No.	1	2	3	4	5	6	7
Circuit (post)	○	×	○	×	○	×	○
Model No.	B4P7-VH						

2. When setting three times of pitch with omitting every other two posts
However, posts shall be inserted in No.1-circuit and No. N-circuit.

B *1 P *2 -VH

e.g.)

Circuit No.	1	2	3	4	5	6	7
Circuit (post)	○	×	×	○	×	×	○
Model No.	B3P7-VH						

3. When setting four times of pitch with omitting every other three posts
However, posts shall be inserted in No.1-circuit and No. N-circuit.

B *1 P *2 -VH

e.g.)

Circuit No.	1	2	3	4	5	6	7	8	9
Circuit (post)	○	×	×	×	○	×	×	×	○
Model No.	B3P9-VH								