THIS DOCUMENT IS THE PROPERTY OF KEYSTONE ELECTRONICS CORP. AND SHALL NOT BE REPRODUCED, DISTRIBUTED OR USED AS A BASIS FOR MANUFACTURE WITHOUT PRIOR WRITTEN PERMISSION FROM KEYSTONE ELECTRONICS CORP.

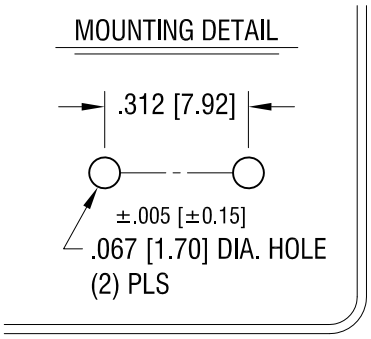

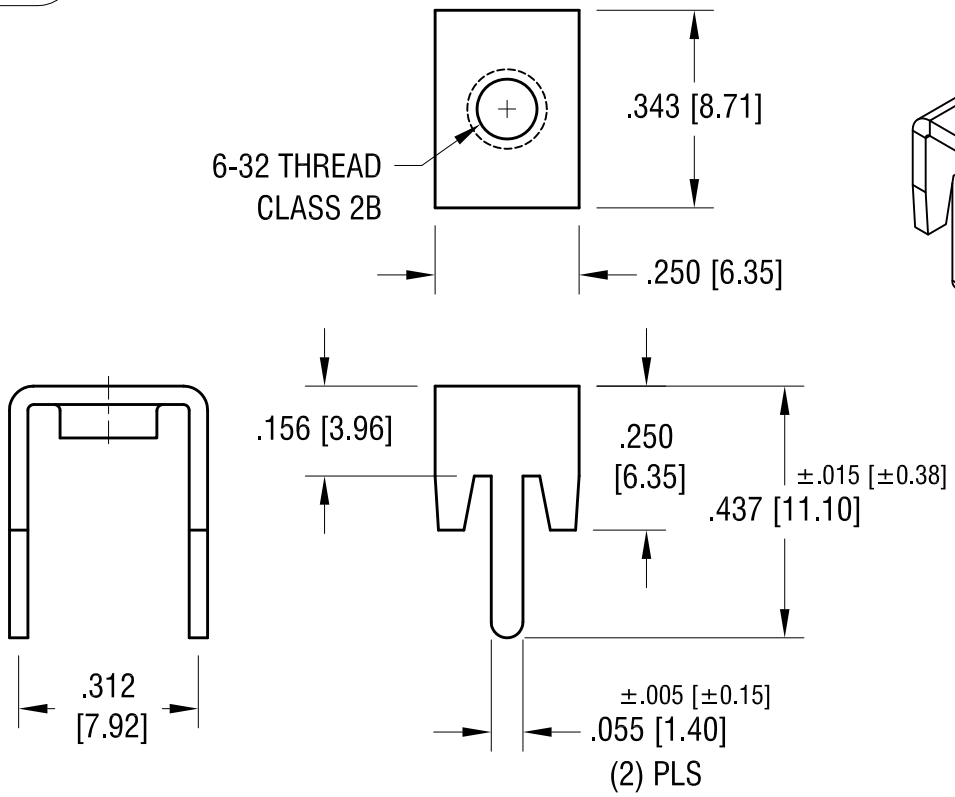

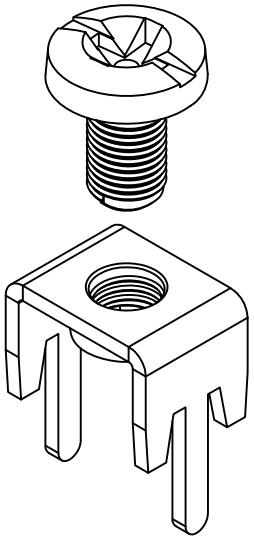

LOW-PROFILE PC SCREW TERMINAL W/ COLORED SCREW HEAD

PART NO.	HEAD COLOR	PART NO.	HEAD COLOR
8198-2	RED	8198-5	BLUE
8198-3	BLACK	8198-6	GREEN
8198-4	WHITE	8198-7	YELLOW

NOTE:

1. TERMINAL:
   MAT'L - .032 [0.81] TH'K BRASS, MATTE TIN PLATE
   SCREW : ONE (1) 6-32 x 1/4 L., SUPPLIED LOOSE.
   MAT'L - BRASS, NICKEL PLATE

DATE	DESCRIPTION	REV.
7.15.09	CHANGE AS PER ECN 09–105	B
1.3.08	CHANGE AS PER ECN 08–025	A

KEYSTONE ELECTRONICS CORP.

www.keyelco.com • ASTORIA, N.Y. 11105-2017 • Tel (718) 956-8900

PART NAME: LOW-PROFILE TERM. W/ COLORED SCREW HEAD

MATERIAL: AS NOTED

FINISH: AS NOTED

DRN BY: BOONE | DATE: 10.1.03

APP'D: LN | SCALE: 3X

TOLERANCES INCH [MM]
DECIMAL ± .010 [± 0.25]
ANGULAR ± 1°
UNLESS OTHERWISE SPECIFIED

CODE: C

DWG NO. 8198-2 - 8198-7