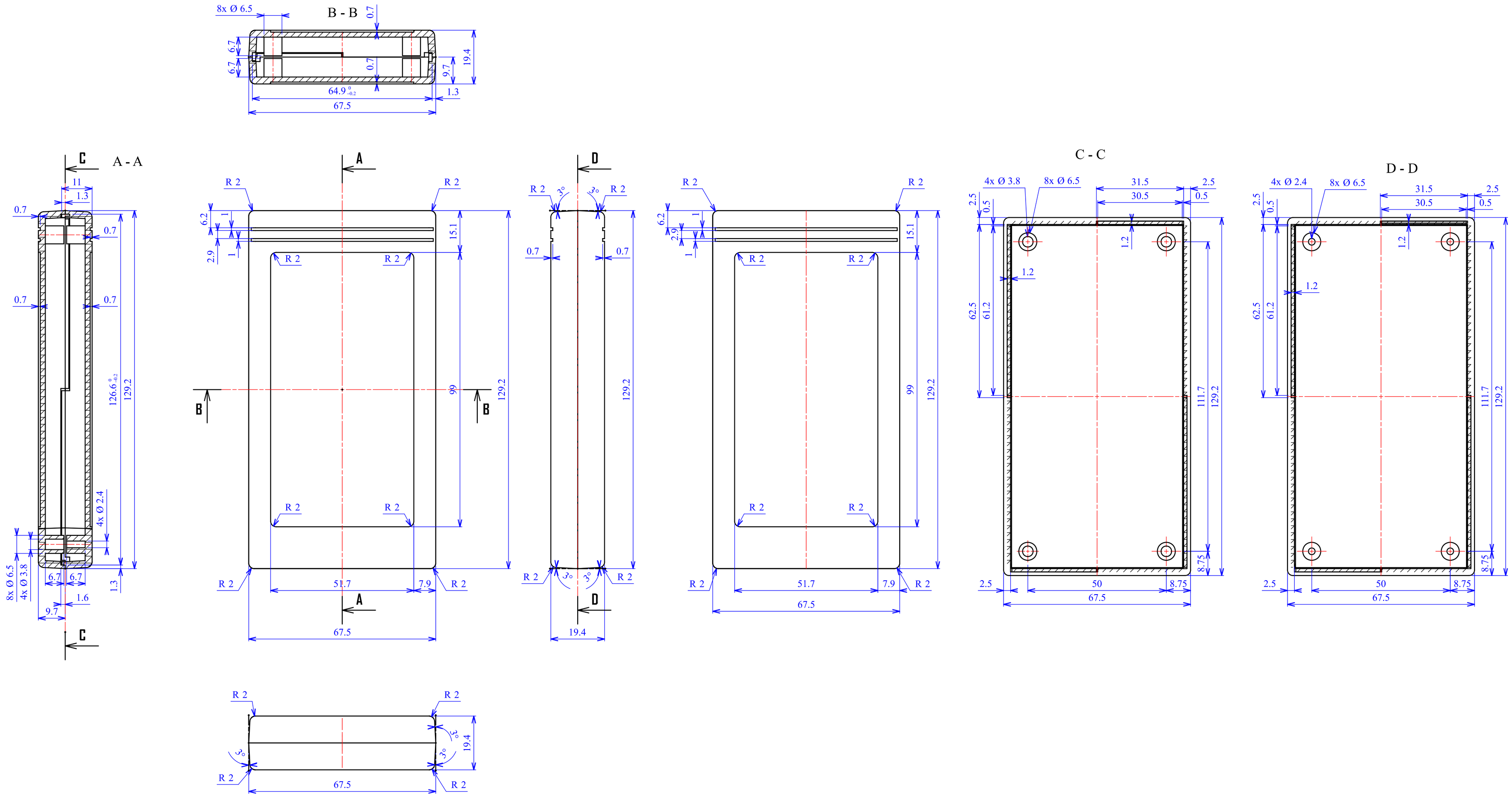

Model produktu	Z-34 A	
Format: A4	Materiał: Polystyrene (PS)	
Skala: 1:1	Tolerancja: +/- 0.1	

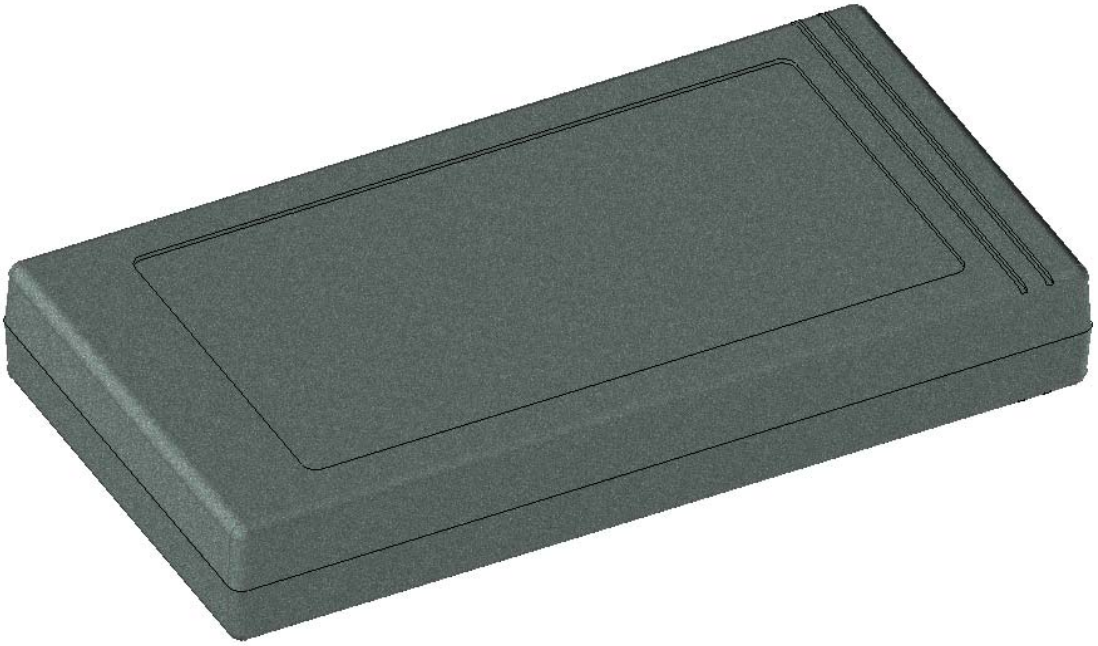

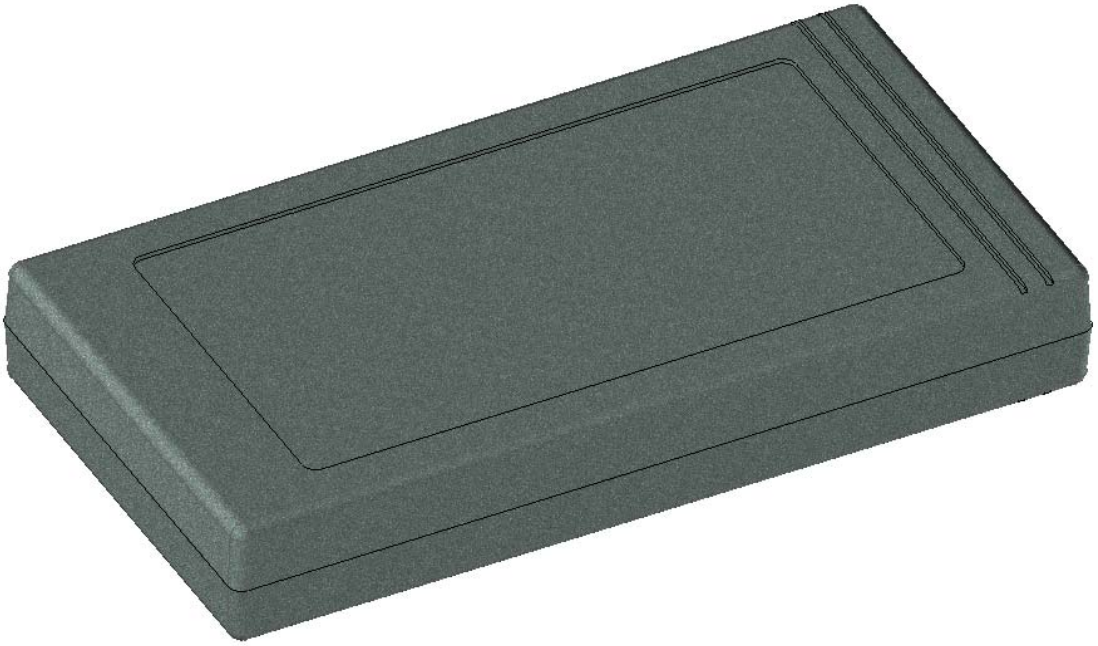

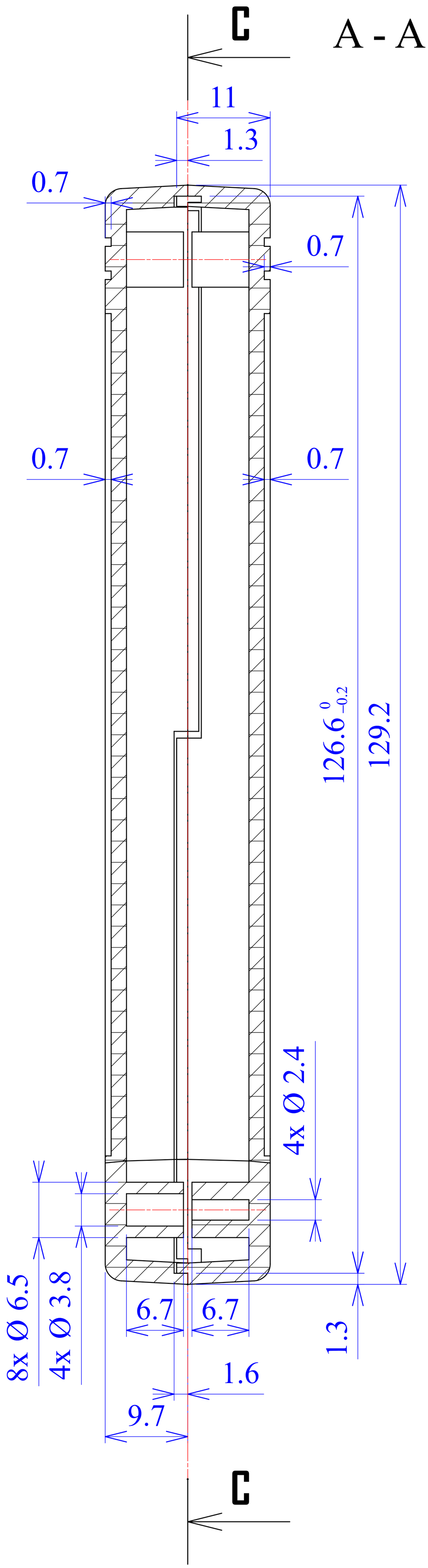
C
A - A
11
1.3
0.7
0.7
0.7
0.7
126.6 0 −0.2
129.2
4x Ø 2.4
8x Ø 6.5
4x Ø 3.8
6.7
6.7
1.3
1.6
9.7
C

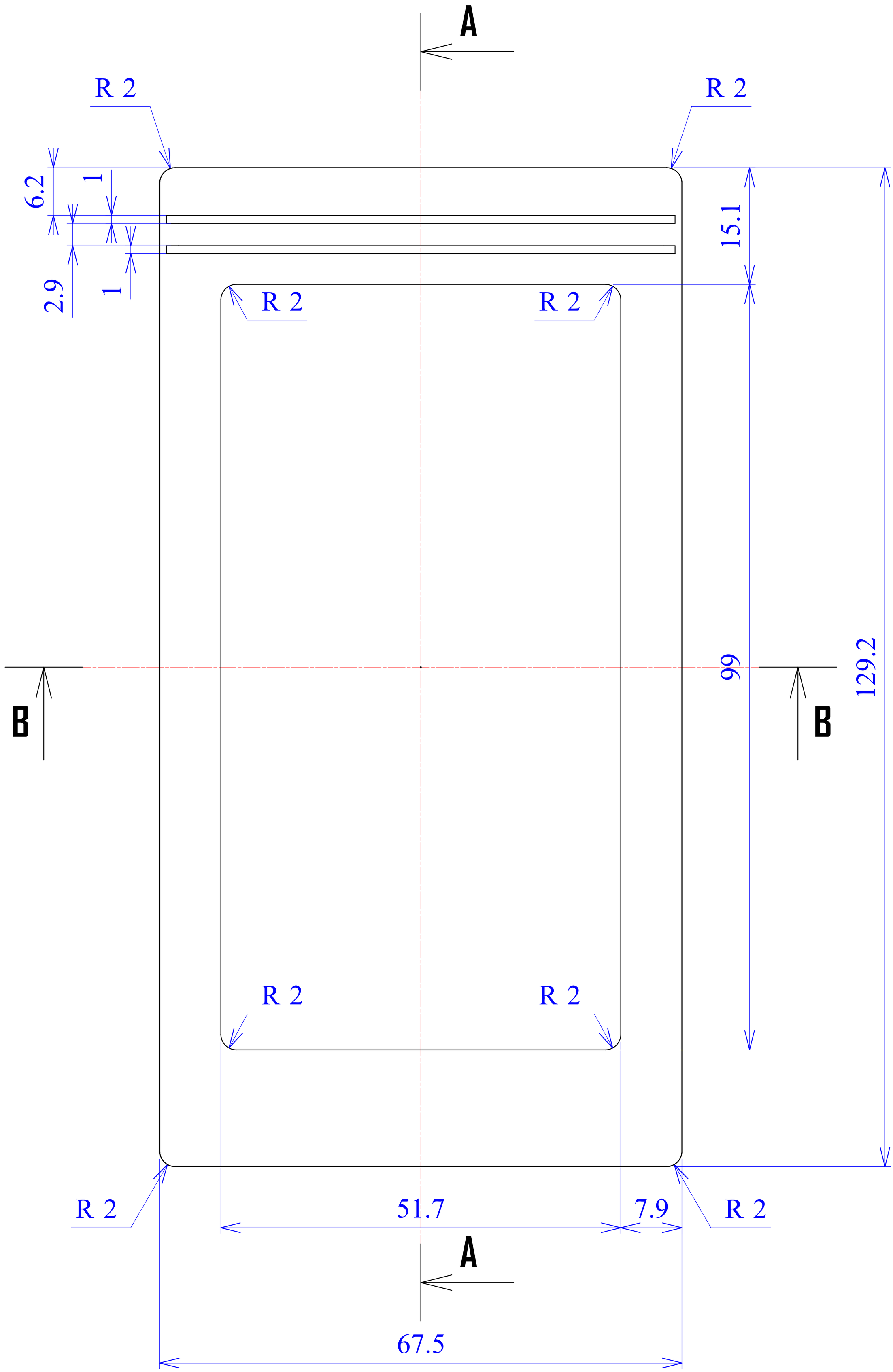
A
R 2
R 2
6.2
1
2.9
1
15.1
R 2
R 2
99
129.2
B
B
R 2
R 2
R 2
51.7
7.9
R 2
A
67.5

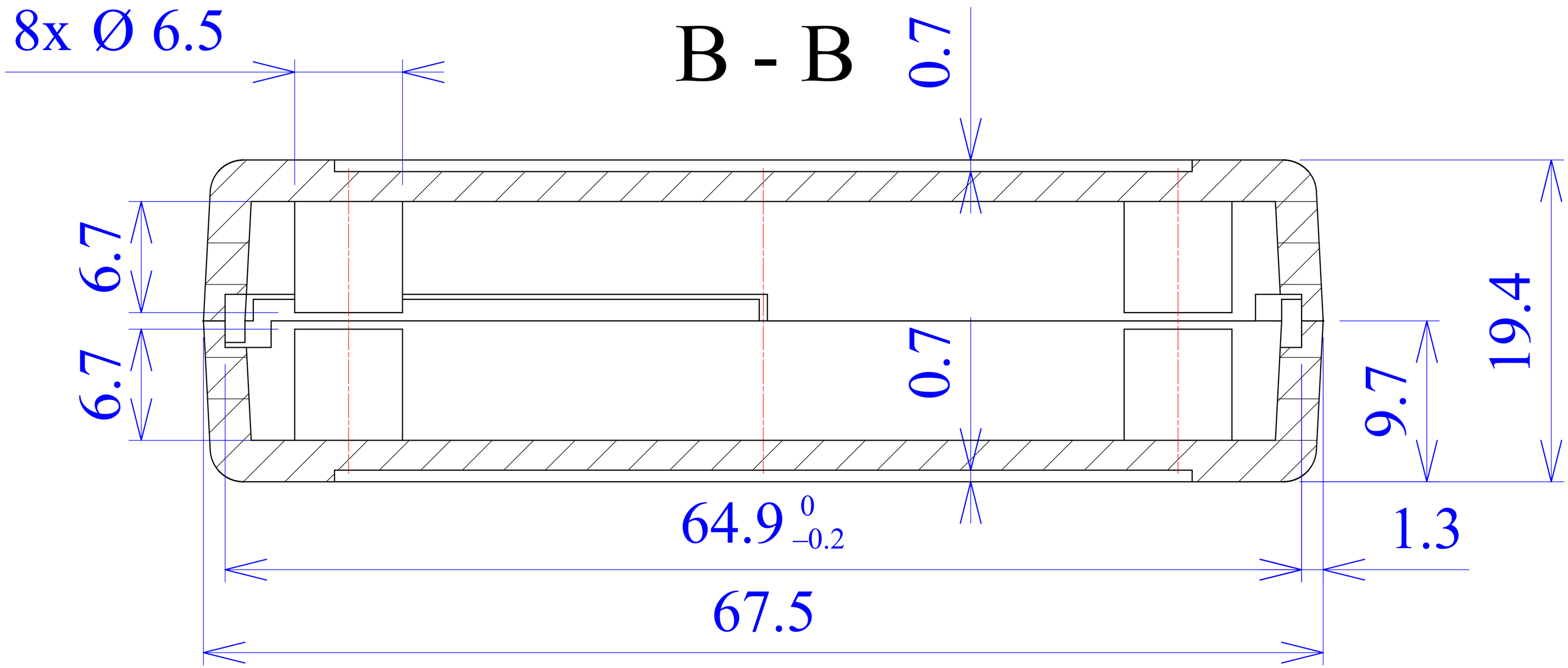
8x Ø 6.5
B - B
0.7
6.7
6.7
0.7
9.7
19.4
64.9 0 −0.2
1.3
67.5

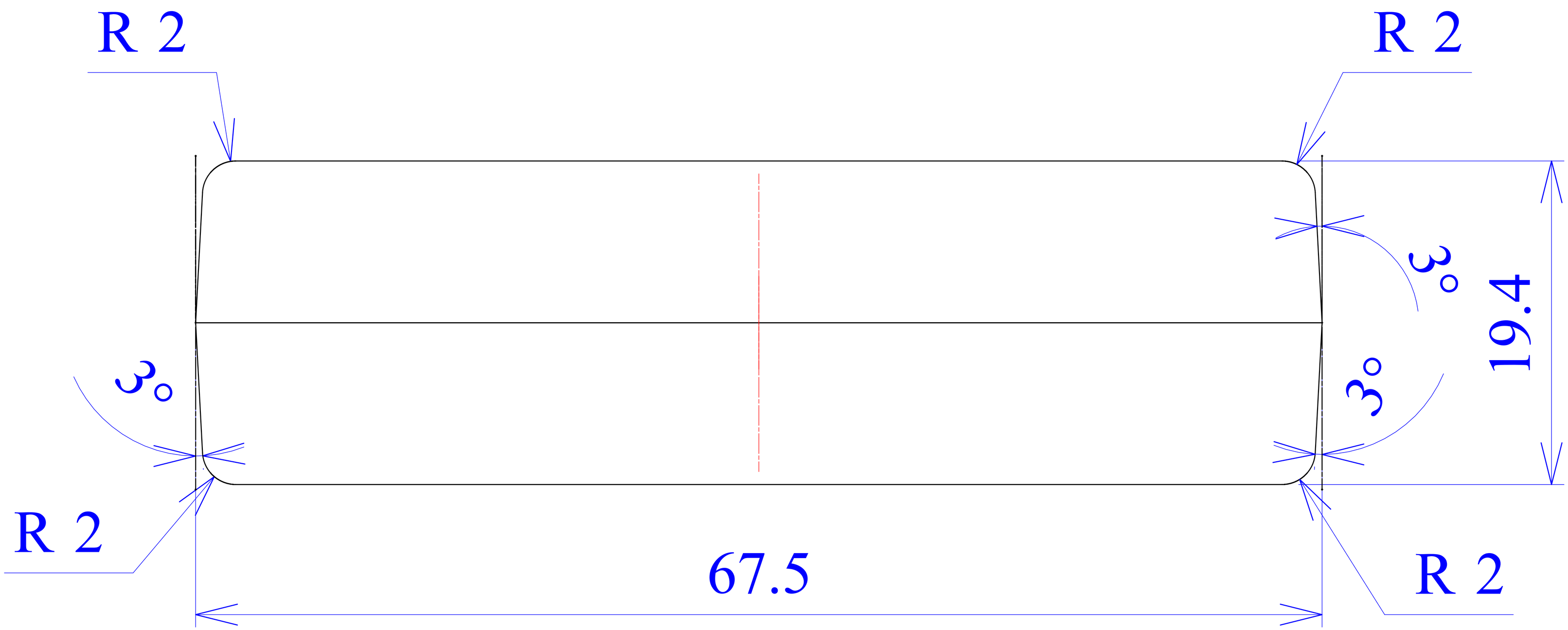
R 2
R 2
3°
19.4
3°
3°
R 2
67.5
R 2

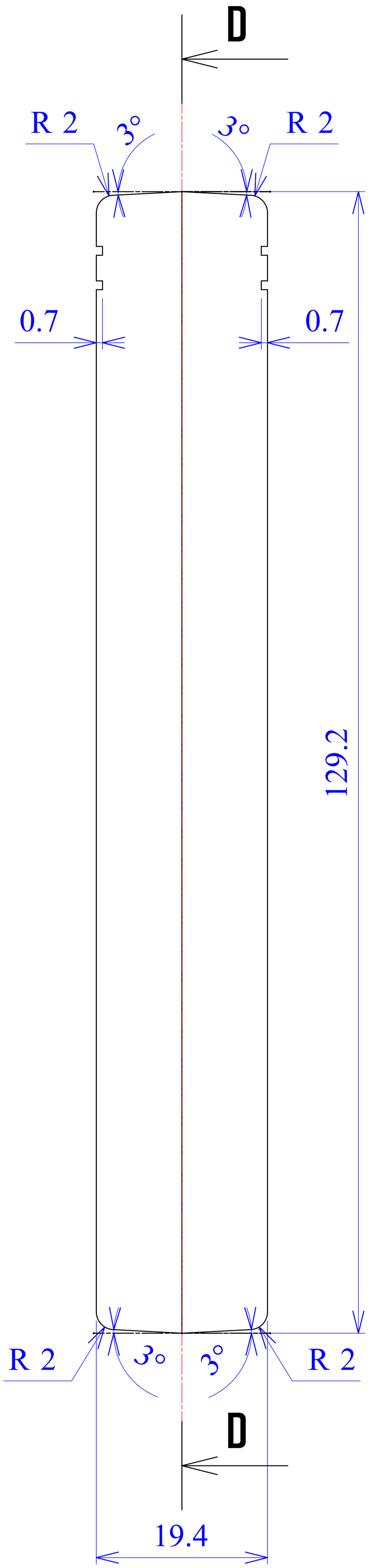
D
R 2
3°
3°
R 2
0.7
0.7
129.2
R 2
3°
3°
R 2
D
19.4

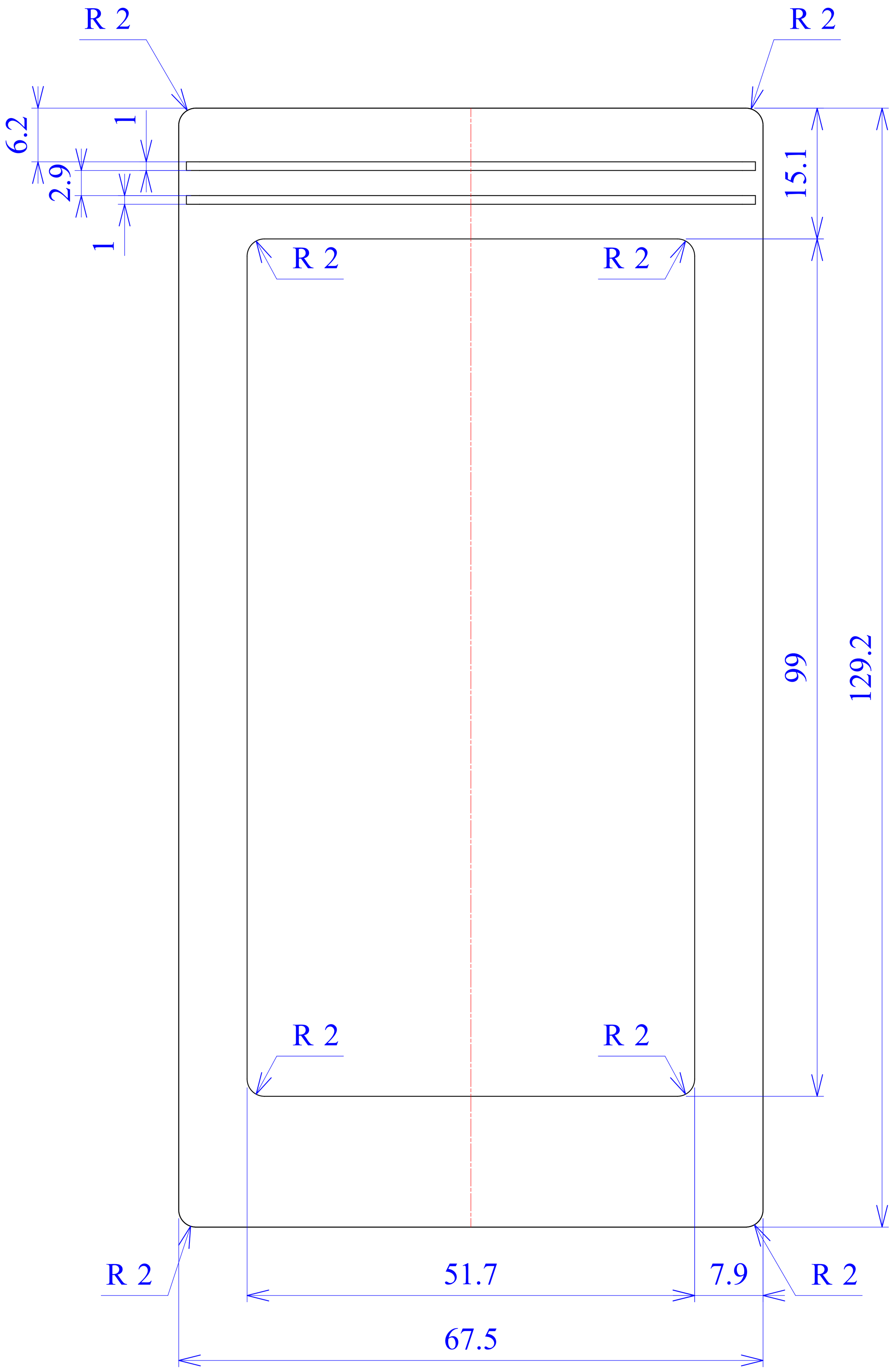
R 2
R 2
6.2
1
2.9
1
15.1
R 2
R 2
99
129.2
R 2
R 2
R 2
51.7
7.9
R 2
67.5

C - C

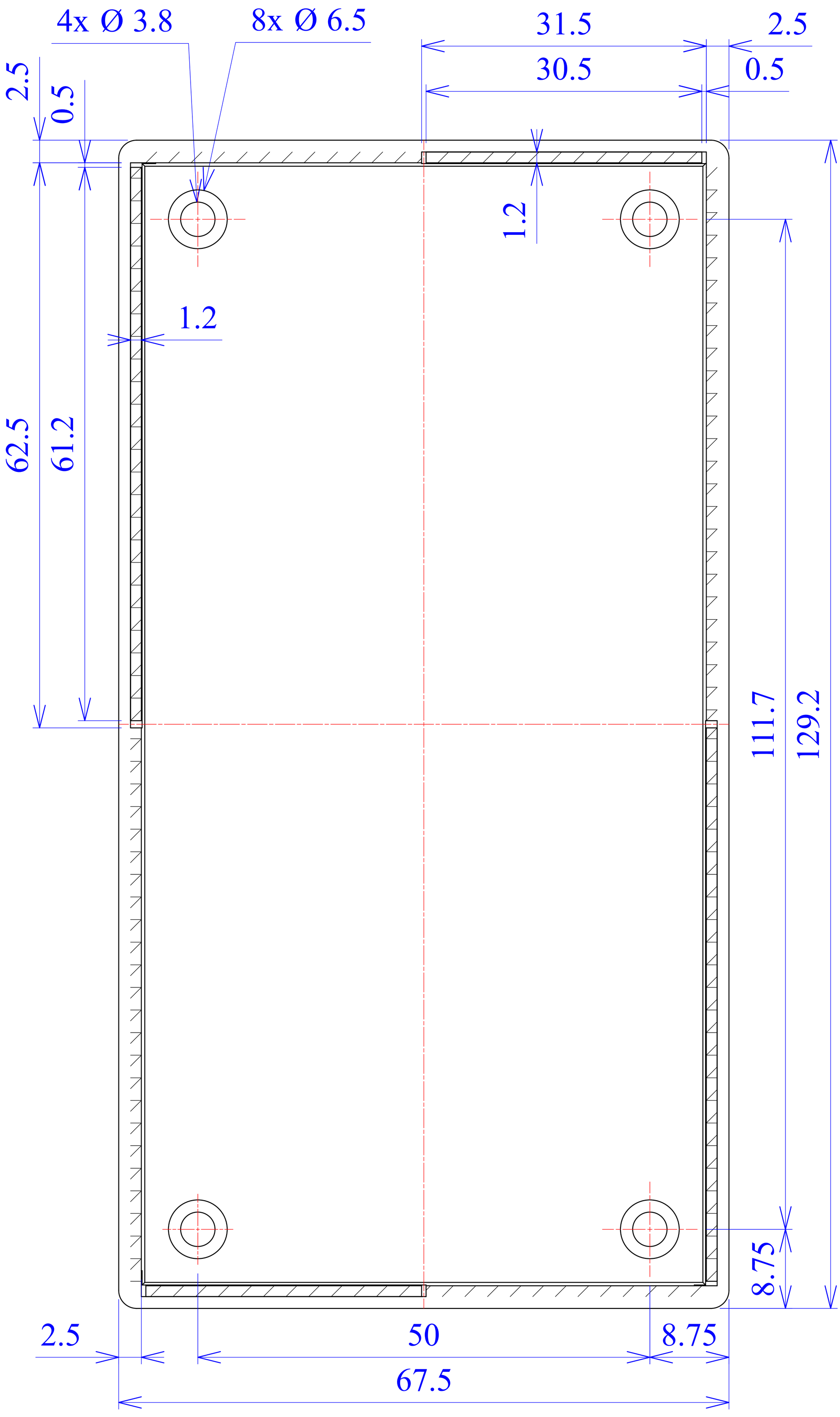
4x Ø 3.8
8x Ø 6.5
31.5
2.5
30.5
0.5
2.5
0.5
1.2
1.2
62.5
61.2
111.7
129.2
8.75
2.5
50
8.75
67.5

D - D

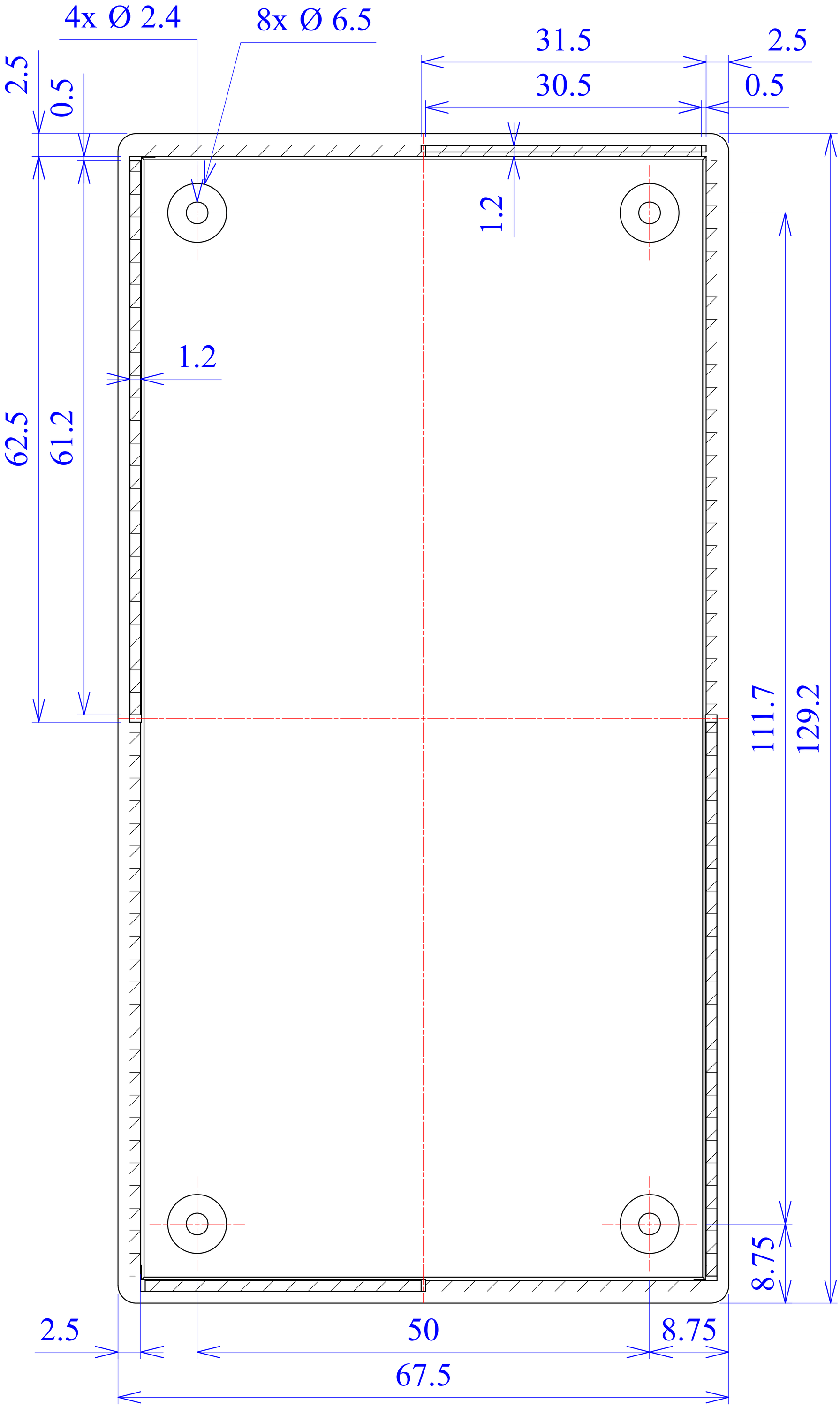
4x Ø 2.4
8x Ø 6.5
31.5
30.5
2.5
0.5
2.5
0.5
1.2
1.2
62.5
61.2
111.7
129.2
8.75
2.5
50
8.75
67.5