PRELIMINARY SPEC

LSL-063-02R

Features

- LSL-063-02 CONSISTS OF 32 LED, VIEWING ANGLE 120 ° PER LED.
- LED SPACING: 14 MM.
- SIZE OF ENTIRE MODULE (LXW): 448 MM X 10 MM.
- EACH MODULE CAN BE SUB-DIVIDED INTO SMALLER MODULES OF 4 LED OR IN MULTIPLE OF 4 LED.
- SIZE OF SMALLEST UNIT (LXW): APPROX. 10MM X 56MM.
- HIGH BRIGHTNESS SMD LED.
- RoHS COMPLIANT.

Applications

- TO COUPLE LED-LIGHT INTO TRANSPARENT OR DIFFUSED GLASS FOR EMERGENCY SIGNS AND LIT ADVERTISEMENTS.
- ESCAPE ROUTE MARKER.
- BORDER MARKER.
- STAIR MARKERS.

Package Dimensions

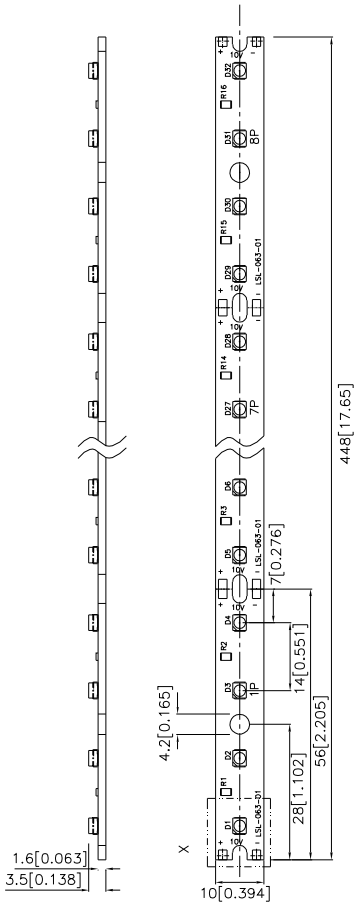

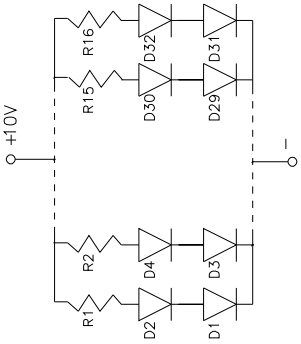

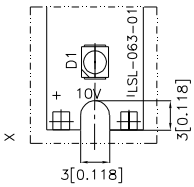

D1-D32:KA-3528SEC-H

R1-R16:SMD1206 270 OHM 1/4W

Notes:
1. All dimensions are in millimeters (inches).
2. Tolerance is ±0.25(0.01") unless otherwise noted.
3. Lead spacing is measured where the leads emerge from the package.
4. Specifications are subject to change without notice.

Operating Data (Ta=25℃)

Parameter	Symbol	Value	Unit
Colour of Emission	-	Red	-
Number of LEDS	-	32	-
Nominal Wavelength (typ)	λ dom	630	nm
Chromaticity coordinates acc.to CIE 1931(typ)	X	-	-
	Y	-	
Temp.-Coeff.of λdom (typ)	TCλdom	0.07	nm/°C
Temp.-Coeff.chrom.coord (typ)	TC_X	-	10^{-3}/°C
	TC_Y	-	10^{-3}/°C
Spectr.Line Half-width (typ)	Δλ 1/2	25	nm
Luminous Intensity (Per LED) (typ)	I_V	850	mcd
Temp.-Coeff.of Lum.Int (typ)	TC_{IV}	-0.15	%/°C
Viewing Angle (Per LED) (typ)	2φ	120	°
Nom.Operating Voltage	V_B	+10.5	V_{DC}
Operating Current (typ)	I_B	365	mA
Temp.-Coeff.of I_B (typ)	TC_{IB}	+0.03	%/°C
Nom. Power Consumption	P	3.9	W
Weight (approx.)	M	12.5	g

Maximum Ratings

Parameter	Symbol	Value	Unit
Operating Temperature at TC-Point	Tc	-30~+85	℃
Storage Temperature	Tstg	-40~+85	℃
Maximum Current when con-Nected in parallel	IBmax	1.6	A
Operating Voltage	V	+10~+11	Vdc
Power Consumption	Ptot	4.3	W

PACKING

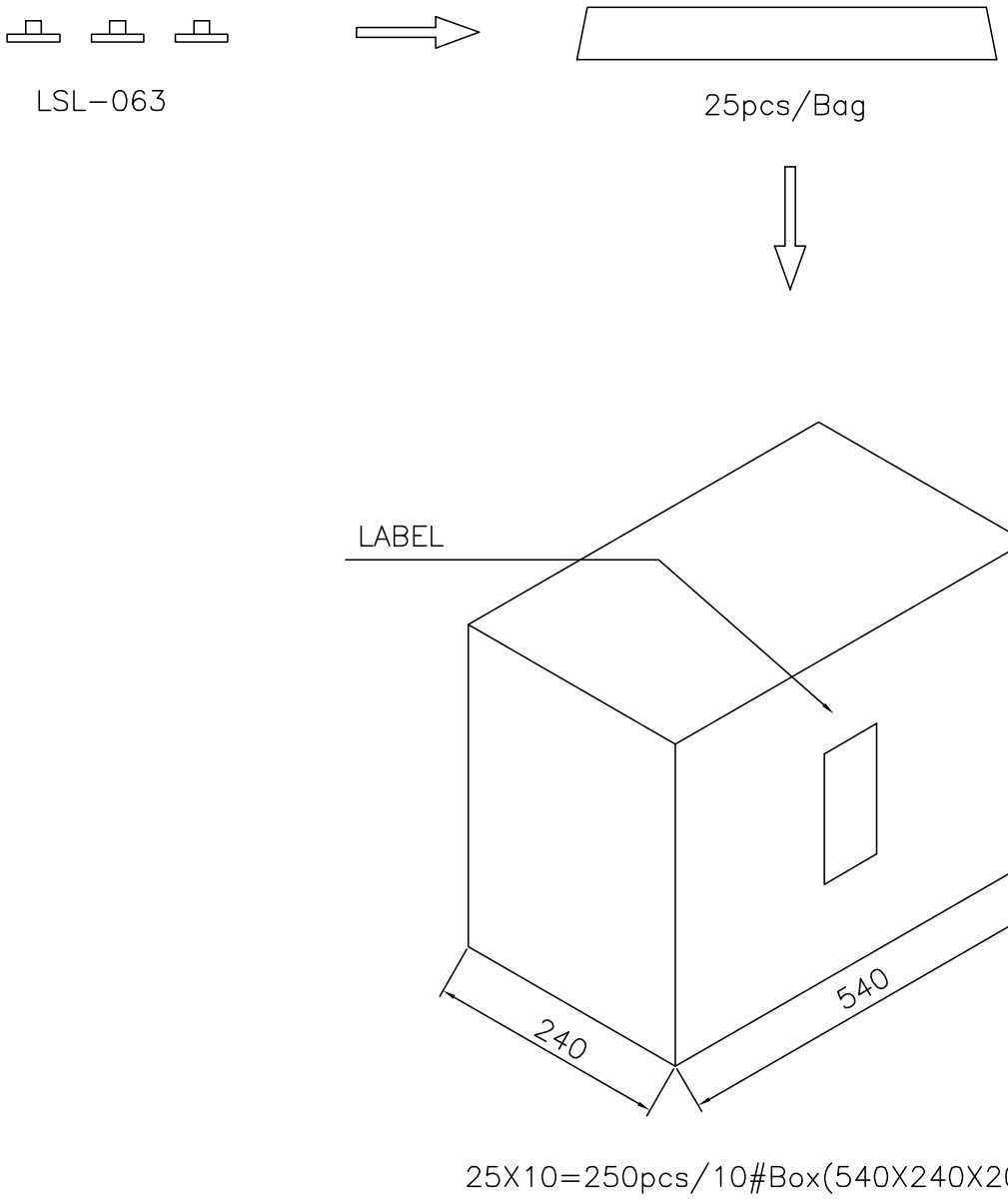

Remarks:

If special sorting is required (e.g. binning based on luminous intensity, or wavelength), the typical accuracy of the sorting process is as follows:

1. Wavelength: +/-1nm
2. Luminous Intensity: +/-15%

Note: Accuracy may depend on the sorting parameters.