Document Receipt Acknowledgement
Date: Section: Name:

Document Number: C2N6-ENF19-001
Date: Dec.,12,2018

Attention:
TTI

Product Withdrawal Notice

【Block Type EMIFIL®】BNX002-01,BNX003-01, BNX005-01, BNX102-01

Dear. Valued Customer

Thank you very much for your great and continued support for business with Murata.
This is the official notification that some of our products will be discontinued as detailed below.
Please review this, and indicate your feedback for this Notice in writing by Feedback Due.
Also, please place Last Time Buy Order by the Last Time Order Due Date as needed.
Your understanding and support are highly appreciated.

1. Product Type, Customer/Murata/Alternative Part Numbers:

Product Type: 【Block Type EMIFIL®】 BNX002-01,BNX003-01, BNX005-01, BNX102-01

Please refer to the attached documents for detailed Part Numbers' information.

2. Reasons/Background:

Chip Multilayer Ceramic Capacitor using Precious Metal material for electrode is loaded into these series, which is going to be EOL. We would like to propose New developed series using Base metal-Multilayer Ceramic Capacitor for alternative product.

3. Product Withdrawal Schedule:

Last Time Order Due:	Dec.,31,2019
Last Production Date:	Jun.,30,2020
Last Shipment Date:	Jun.,30,2020

4. Feedback Due:

Dec.,31,2019

In case you need further discussion and/or adjustments with Murata for this Notice ,
please indicate your feedback to Murata in writing by the Feedback Due.

5. Contact Window:

Should you have any questions or concerns,
please contact Murata Sales, Representative, or Distributor in your area.

Truly Yours. Thank you.

Murata Manufacturing, Co., Ltd.
Product Engineering Sec.6 Product Engineering Dept. EMI Filter .Division
Manager : Yohei TSUDA

Document Number: C2N6-ENF19-001

Confirmation Letter

TTI

Murata Manufacturing, Co., Ltd.

Product Withdrawal Confirmation

Product Withdrawal detailed below is ☐ Subject to Further Discussion. ☐ Accepted.

Product Type: 【Block Type EMIFIL®】 BNX002-01,BNX003-01, BNX005-01, BNX102-01

Last Time Order Due: Dec.,31,2019

Comments, Questions, Requests, etc.

Signature
Date: (MM, DD, YYYY)

Title:

Name:

	BNX002-01（生産終息品 / Withdrawal）							BNX002-11（代替品 / Substitute）						
定格 Rating	定格電圧 Rated Voltage V(DC)	耐電圧 Withstanding Voltage V(DC)	定格電流 Rated Current A(DC)	絶縁抵抗 Insulation Resistance MΩ	挿入損失 Insertion Loss		使用温度範囲 Operating Temperature	定格電圧 Rated Voltage V(DC)	耐電圧 Withstanding Voltage V(DC)	定格電流 Rated Current A(DC)	絶縁抵抗 Insulation Resistance MΩ	挿入損失 Insertion Loss		使用温度範囲 Operating Temperature
	50	125	10	100	1MHz～1GHz：	40dB以上	−30～+85℃	50	125	10	100	1MHz～1GHz：	40dB以上	−40～+85℃

IL特性 Insertion Loss

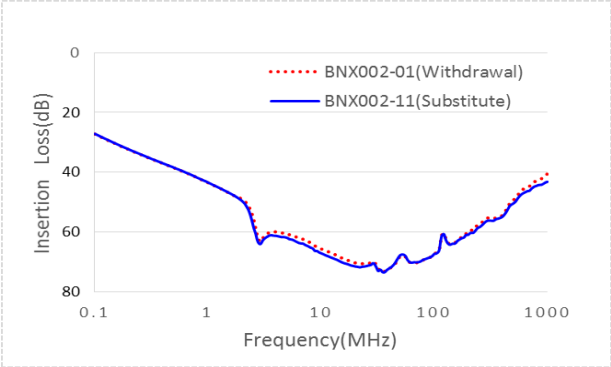

外観、寸法 Style Dimensions

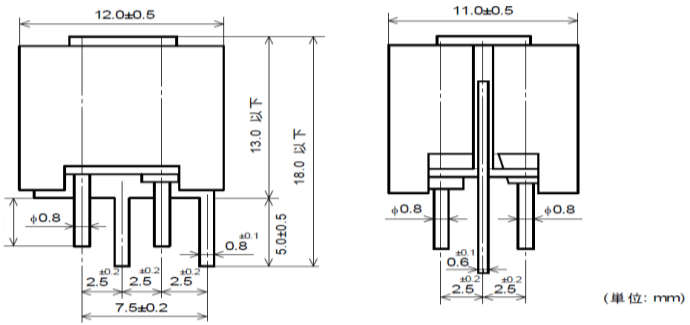

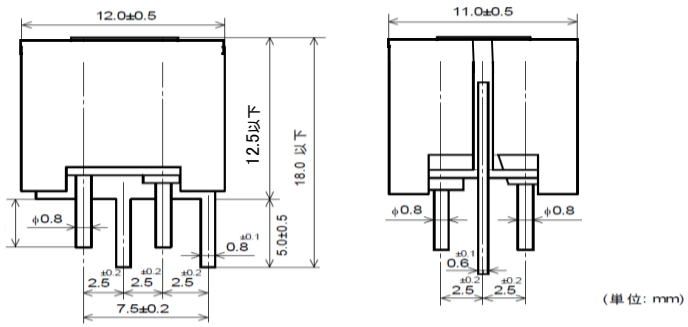

表示 Marking

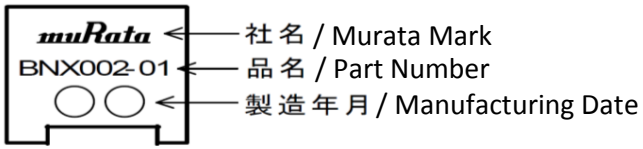

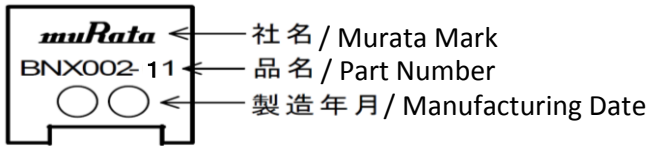

取付け穴寸法図 Dimensions of Installation Holes

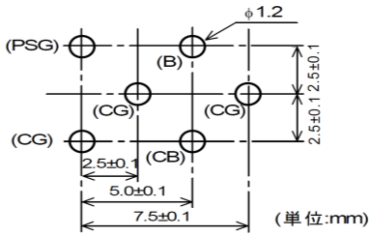

	BNX003-01（生産終息品 / Withdrawal）							BNX003-11（代替品 / Substitute）						
定格 Rating	定格電圧 Rated Voltage V(DC)	耐電圧 Withstanding Voltage V(DC)	定格電流 Rated Current A(DC)	絶縁抵抗 Insulation Resistance MΩ	挿入損失 Insertion Loss		使用温度範囲 Operating Temperature	定格電圧 Rated Voltage V(DC)	耐電圧 Withstanding Voltage V(DC)	定格電流 Rated Current A(DC)	絶縁抵抗 Insulation Resistance MΩ	挿入損失 Insertion Loss		使用温度範囲 Operating Temperature
	150	375	10	100	5MHz～1GHz：	40dB以上	−30～+85℃	150	375	10	100	5MHz～1GHz：	40dB以上	−40～+85℃

IL特性 Insertion Loss

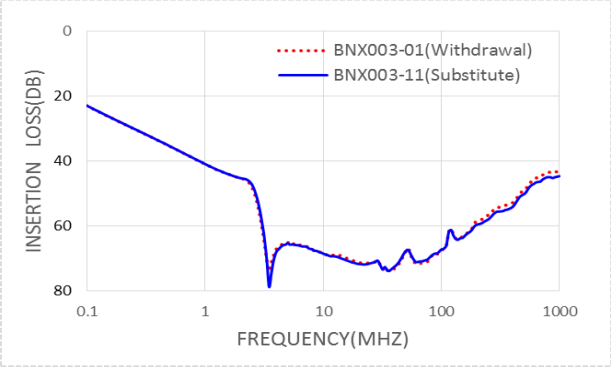

外観、寸法 Style Dimensions

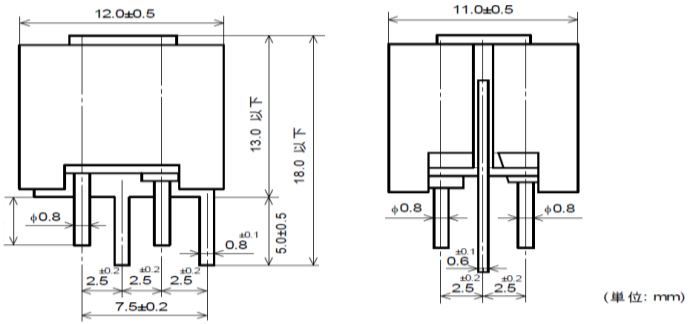

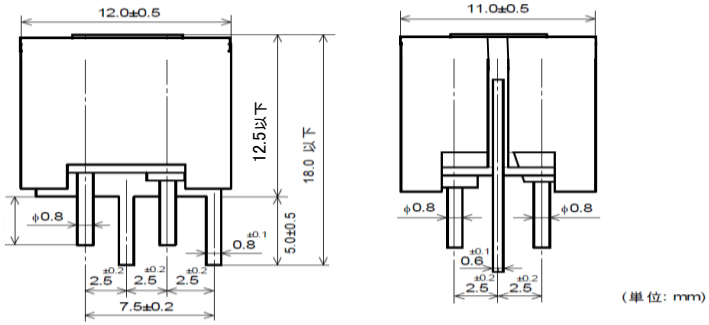

表示 Marking

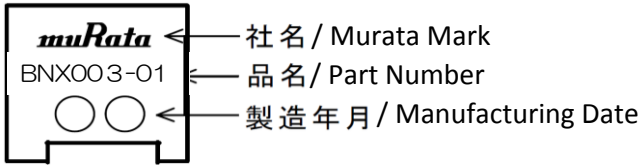

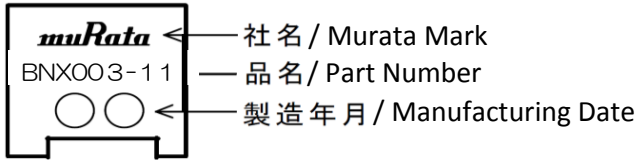

取付け穴寸法図 Dimensions of Installation Holes

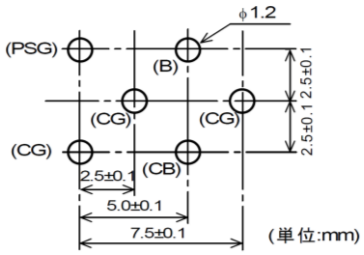

	BNX005-01（生産終息品 / Withdrawal）							BNX005-11（代替品 / Substitute）						
定格 Rating	定格電圧 Rated Voltage V(DC)	耐電圧 Withstanding Voltage V(DC)	定格電流 Rated Current A(DC)	絶縁抵抗 Insulation Resistance MΩ	挿入損失 Insertion Loss		使用温度範囲 Operating Temperature	定格電圧 Rated Voltage V(DC)	耐電圧 Withstanding Voltage V(DC)	定格電流 Rated Current A(DC)	絶縁抵抗 Insulation Resistance MΩ	挿入損失 Insertion Loss		使用温度範囲 Operating Temperature
	50	125	15	100	1MHz～1GHz：	40dB以上	-30～+85℃	50	125	15	100	1MHz～1GHz：	40dB以上	-40～+85℃

IL特性 Insertion Loss

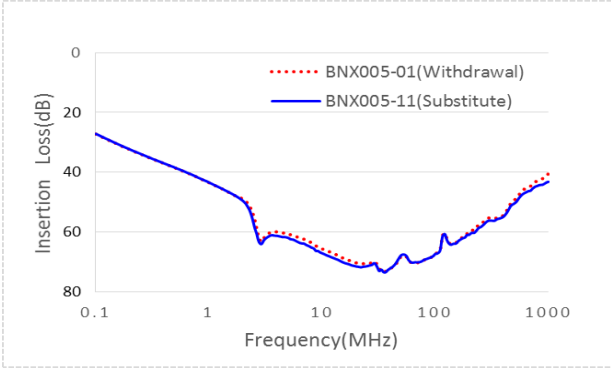

外観、寸法 Style Dimensions

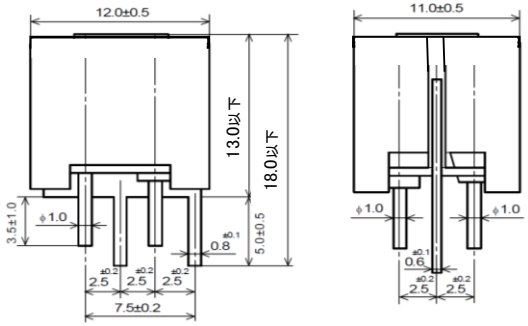

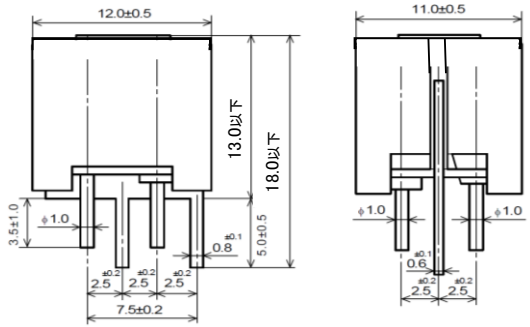

表示 Marking

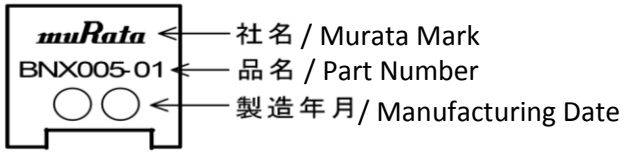

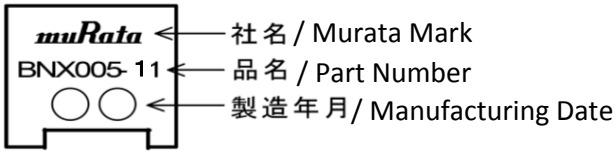

取付け穴寸法図 Dimensions of Installation Holes

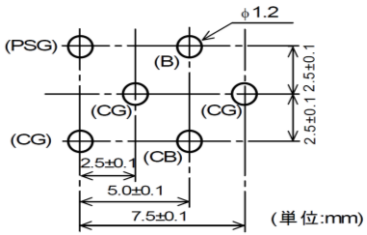

Initial Data & Reliability Test Comparison Data of BNX(_-01&_-11) series

添付資料
Appendix

撤退品番/Withdrawal part number：BNX002-01（PEM）
代替品番/Alternative part number：BNX002-11（NEM）

試験項目、条件 Testing Item、Condition	サンプル数 Sample Size	評価項目 Confirmed Item		撤退品番 Withdrawal PN	代替品番 Alternative PN	判定値 Acceptance Value	判定 OK/NG
1. 初期値/Initial	30	L寸法/Dimension L(mm)	AVG	10.925	10.921	11.0±0.5 mm	**OK**
			MAX	10.99	10.99		
			MIN	10.88	10.87		
			σ	0.023	0.029		
		W寸法/Dimension W(mm)	AVG	11.997	11.973	12.0±0.5 mm	**OK**
			MAX	12.08	12.01		
			MIN	11.94	11.94		
			σ	0.036	0.019		
		TA寸法/Dimension T(mm)	AVG	16.560	16.600	18.0mm MAX	**OK**
			MAX	16.62	16.67		
			MIN	16.45	16.36		
			σ	0.042	0.063		
		TB寸法/Dimension T(mm)	AVG	11.400	11.407	12.5mm MAX (Withdrawal 13.0)	**OK**
			MAX	11.49	11.44		
			MIN	11.32	11.34		
			σ	0.057	0.021		
	30	絶縁抵抗/ Insulation Resistance(MΩ)	AVG	2.42.E+04	3.85.E+03	100MΩ MIN.	**OK**
			MAX	4.5.E+04	6.7.E+03		
			MIN	3.8.E+03	2.3.E+03		
			σ	-	-		
		耐電圧/Dielectric Strength(V) 125DCV		OK	OK	No damaged	**OK**
	10	電圧降下/ Voltage Drop Rated current 10A	AVG	22.887	22.907	30mV MAX	**OK**
			MAX	25.54	25.34		
			MIN	20.71	21.42		
			σ	1.565	1.343		
	30	挿入損失/ Insertion Loss [IL] (dB)	AVG	44.15	42.89	40dB MIN.	**OK**
			MAX	44.4	44.7		
		(1MHz)	MIN	43.9	41.0		
			AVG	73.14	71.38		
			MAX	74.2	72.9		
		(10MHz)	MIN	72.0	70.0		
			AVG	76.17	71.44		
			MAX	77.6	72.8		
		(100MHz)	MIN	73.9	70.2		
			AVG	42.48	41.94		
			MAX	42.6	42.9		
		(1GHz)	MIN	42.4	41.1		
2. 耐振性/Vibration 振動周波数/Oscillation Frequency : 10 to 2000 to 10Hz for 20min. 加速度幅/Total Amplitude : 1.5mm 試験時間/Testing Time : A period of 2h in each of 3 mutually perpendicular directions (Total 6h)	10	外観/Appearance		OK	OK	No damaged	**OK**
		絶縁抵抗/ Insulation Resistance(MΩ)	AVG	3.71.E+03	5.25.E+03	30MΩ MIN.	**OK**
			MAX	9.7.E+03	1.3.E+04		
			MIN	2.2.E+03	1.9.E+03		
		耐電圧/Withstand Voltage(V) 50DCV		OK	OK	No failure	**OK**
	3	挿入損失/ Insertion Loss [IL] (dB)	AVG	42.69	41.53	40dB MIN.	**OK**
			MAX	43.2	41.6		
		(1MHz)	MIN	42.1	41.5		
			AVG	71.99	71.77		
			MAX	76.7	74.9		
		(10MHz)	MIN	69.0	68.1		
			AVG	72.27	70.72		
			MAX	77.8	73.5		
		(100MHz)	MIN	69.1	67.7		
			AVG	41.88	41.57		
			MAX	42.3	42.1		
		(1GHz)	MIN	41.4	40.5		
3. はんだ付け性/Solderability ﾌﾗｯｸｽ/Flux : Ethanol solution of rosin,25(wt)% 予熱/Pre-Heating : 150±10℃/60s はんだ/Solder : Sn-3.0Ag-0.5Cu はんだ温度/Solder Temperature : 245±5℃ 浸せき時間/Immersion Time : 2±0.5s	10	濡れ面積/ New uniform coating area		OK	OK	>75%	**OK**

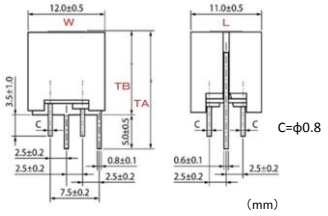

試験項目、条件 Testing Item、Condition	サンプル数 Sample Size	評価項目 Confirmed Item		撤退品番 Withdrawal PN	代替品番 Alternative PN	判定値 Acceptance Value	判定 OK/NG
4. はんだ耐熱性/Resistance to Soldering Heat	10	外観/Appearance		OK	OK	No damaged	**OK**
予熱/Pre-Heating : 150±10℃/60s		絶縁抵抗/	AVG	4.29E+03	5.75E+03	30MΩ MIN.	**OK**
はんだ/Solder : Sn-3.0Ag-0.5Cu		Insulation Resistance(MΩ)	MAX	5.4E+03	6.7E+03		
はんだ温度/Solder Temperature : 270±10℃			MIN	2.8E+03	4.6E+03		
浸せき時間/Immersion Time : 10 +0.5s,-0s		耐電圧/Withstand Voltage(V) 50DCV		OK	OK	No failure	**OK**
	3	挿入損失/	AVG	43.21	42.19	40dB MIN.	**OK**
		Insertion Loss [IL] (dB)	MAX	43.5	42.8		
		(1MHz)	MIN	43.0	41.7		
			AVG	57.20	50.99		
			MAX	58.4	51.6		
		(10MHz)	MIN	55.8	50.5		
			AVG	64.92	59.47		
			MAX	65.3	60.7		
		(100MHz)	MIN	64.7	58.4		
			AVG	41.37	41.60		
			MAX	41.5	41.7		
		(1GHz)	MIN	41.3	41.5		
5. 手はんだ耐熱性/Resistance to soldering iron	10	外観/Appearance		OK	OK	No damaged	**OK**
はんだ/Solder : Sn-3.0Ag-0.5Cu		絶縁抵抗/	AVG	4.99.E+03	6.18.E+03	30MΩ MIN.	**OK**
こて先温度/Top Temperature : 350±10℃		Insulation Resistance(MΩ)	MAX	7.0.E+03	7.5.E+03		
浸せき時間/Time : 4±1s			MIN	3.9.E+03	5.0.E+03		
		耐電圧/Withstand Voltage(V) 50DCV		OK	OK	No failure	**OK**
	3	挿入損失/	AVG	42.99	42.84	40dB MIN.	**OK**
		Insertion Loss [IL] (dB)	MAX	43.1	43.6		
		(1MHz)	MIN	42.9	42.3		
			AVG	59.35	53.25		
			MAX	59.9	55.5		
		(10MHz)	MIN	58.8	52.1		
			AVG	65.45	64.15		
			MAX	65.8	64.6		
		(100MHz)	MIN	65.2	63.9		
			AVG	41.55	41.5		
			MAX	41.6	41.6		
		(1GHz)	MIN	41.5	41.4		
6. 温度ｻｲｸﾙ/Temperature Cycle	Withdrawal:10 Alternative:32	外観/Appearance		OK	OK	No damaged	**OK**
1ｻｲｸﾙ条件/1 Cycle condition		絶縁抵抗/	AVG	1.09.E+04	4.21.E+03	30MΩ MIN.	**OK**
(1) -40℃+0/-3℃, 30 min. (2) ordinary Temp. , (～5 min.)		Insulation Resistance(MΩ)	MAX	4.3.E+04	9.5.E+03		
(3) +85℃+3/-0℃, 30 min. (4) ordinary Temp. , (～5 min.)			MIN	3.2.E+03	2.1.E+03		
回数/Total of Cycles :1000 cycles		耐電圧/Withstand Voltage(V) 50DCV		OK	OK	No failure	**OK**
	3	挿入損失/	AVG	42.32	42.24	40dB MIN.	**OK**
		Insertion Loss [IL] (dB)	MAX	42.4	42.3		
		(1MHz)	MIN	42.2	42.2		
			AVG	72.99	71.11		
			MAX	73.9	71.5		
		(10MHz)	MIN	71.9	70.6		
			AVG	70.40	70.27		
			MAX	70.9	70.5		
		(100MHz)	MIN	70.2	70.2		
			AVG	41.29	41.50		
			MAX	41.3	61.6		
		(1GHz)	MIN	41.2	41.4		
7. 耐湿負荷試験/Humidity Life	Withdrawal:10 Alternative:32	外観/Appearance		OK	OK	No damaged	**OK**
温度/Temperature : 40±2℃		絶縁抵抗/	AVG	4.23.E+02	4.43.E+02	30MΩ MIN.	**OK**
湿度/Humidity : 95%(RH)		Insulation Resistance(MΩ)	MAX	6.6.E+02	3.3.E+03		
印加電力/Rated Voltage : 50VDC			MIN	3.6.E+02	1.2.E+02		
時間/Time : 1000h		耐電圧/Withstand Voltage(V) 50DCV		OK	OK	No failure	**OK**
	3	挿入損失/	AVG	42.97	42.99	40dB MIN.	**OK**
		Insertion Loss [IL] (dB)	MAX	43.1	43.1		
		(1MHz)	MIN	42.9	42.9		
			AVG	72.3	72.29		
			MAX	72.6	72.7		
		(10MHz)	MIN	72.2	71.8		
			AVG	69.47	70.27		
			MAX	69.7	70.4		
		(100MHz)	MIN	69.2	70.0		
			AVG	42.84	43.17		
			MAX	43.0	43.3		
		(1GHz)	MIN	42.7	43.1		
8. 高温負荷試験/Heat Life	Withdrawal:10 Alternative:32	外観/Appearance		OK	OK	No damaged	**OK**
温度/Temperature : 85±2℃		絶縁抵抗/	AVG	1.60.E+03	9.04.E+03	30MΩ MIN.	**OK**
印加電力/Applying Voltage : Rated Voltage x 2		Insulation Resistance(MΩ)	MAX	9.3.E+03	1.9.E+04		
時間/Time : 1000h			MIN	2.2.E+02	2.5.E+02		
		耐電圧/Withstand Voltage(V) 50DCV		OK	OK	No failure	**OK**
	3	挿入損失/	AVG	43.01	42.94	40dB MIN.	**OK**
		Insertion Loss [IL] (dB)	MAX	43.1	43.0		
		(1MHz)	MIN	43.0	42.9		
			AVG	70.44	72.20		
			MAX	71.3	72.5		
		(10MHz)	MIN	69.7	71.9		
			AVG	77.72	77.85		
			MAX	79.4	78.0		
		(100MHz)	MIN	75.3	77.6		
			AVG	43.08	43.14		
			MAX	43.2	43.2		
		(1GHz)	MIN	42.9	43.0		

For Document Number:
C2N6-ENF19-001

Part Number List

Please find the list below for the target part numbers which are registered as yours in Murata. (Customer Part Number)
Regardless of the list below, all part numbers shall be the target as far as they are categorized into the Product Type indicated in the Document.
Alternative Part Number: Pin Structure, Electrical Characteristics could be identical to or different from the current product.

Customer Part Number	Murata Part Number	Alternative Part Number	Sales Quantity (Unit: pieces)						Memo
			2013FY	2014FY	2015FY	2016FY	2017FY	2018FY till Oct.	
	BNX005-01	BNX005-11	0	0	4	0	0	0	
MURBNX002-01	BNX002-01	BNX002-11	140,000	135,000	125,300	154,698	120,000	94,999	
MURBNX003-01	BNX003-01	BNX003-11	7,000	5,000	38,503	24,000	30,000	11,000	
MURBNX005-01	BNX005-01	BNX005-11	9,501	23,301	31,000	25,000	25,900	16,000	