Data sheet | Item number: 2626-1112/020-000

PCB terminal block; 6 mm²; Pin spacing 7.5 mm; 12-pole; Push-in CAGE CLAMP®; 6,00 mm²; gray

www.wago.com/2626-1112/020-000

Picture differs from the item.

RoHS ✓ Compliant

BOMcheck.net

Color:

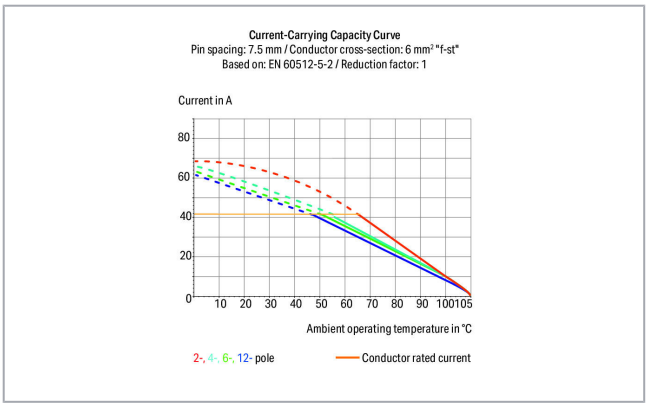

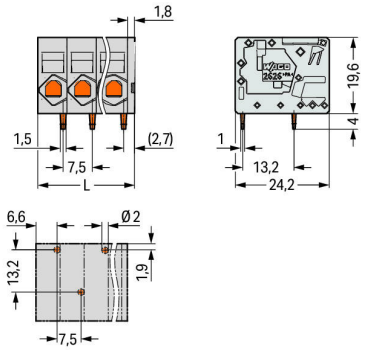

L = (pole no. – 1) x pin spacing + 9.3 mm

Item description

- PCB terminal strips with Push-in CAGE CLAMP® connection
- Push-in termination of solid and ferruled conductors
- Ideal for panel feedthrough applications via operation parallel to conductor entry

Subject to changes. Please also observe the further product documentation!

WAGO Kontakttechnik GmbH & Co. KG
Hansastr. 27
32423 Minden
Phone: +49571 887-0 | Fax: +49571 887-169
Email: info.de@wago.com | Web: www.wago.com

Do you have any questions about our products?
We are always happy to take your call at +49 (571) 887-44222.

- Testing can be performed both parallel and perpendicular to conductor entry

Data
Electrical data

Ratings per IEC/EN

Ratings per	IEC/EN 60664-1
Nominal voltage (III/3)	800 V
Rated surge voltage (III/3)	8 kV
Rated voltage (III/2)	1000 V
Rated surge voltage (III/2)	8 kV
Nominal voltage (II/2)	1000 V
Rated surge voltage (II/2)	8 kV
Rated current	48 A
Legend (ratings)	(III / 2) ≙ Overvoltage category III / Pollution degree 2

Ratings per UL

Approvals per	UL 1059
Rated voltage UL (Use Group B)	600 V
Rated current UL (Use Group B)	38 A
Rated voltage UL (Use Group C)	600 V
Rated current UL (Use Group C)	38 A

Ratings per CSA

Approvals per	CSA
Rated voltage CSA (Use Group B)	600 V
Rated current CSA (Use Group B)	38 A
Rated voltage CSA (Use Group C)	600 V
Rated current CSA (Use Group C)	38 A

Connection data

Connection technology	Push-in CAGE CLAMP®
Actuation type	Operating tool
Solid conductor	0.2 … 10 mm² / 24 … 8 AWG
Fine-stranded conductor	0.2 … 10 mm² / 24 … 8 AWG
Fine-stranded conductor; with insulated ferrule	0.25 … 6 mm²

WAGO Kontakttechnik GmbH & Co. KG
Hansastr. 27
32423 Minden
Phone: +49571 887-0 | Fax: +49571 887-169
Email: info.de@wago.com | Web: www.wago.com

Fine-stranded conductor; with uninsulated ferrule	0.25 … 6 mm²
Fine-stranded conductor; with twin ferrule	0.25 … 2.5 mm²
Strip length	13 … 15 mm / 0.51 … 0.59 inch
Conductor connection direction to PCB	0 °
Pole No.	12
Total number of connection points	12
Total number of potentials	12
Number of connection types	1
Number of levels	1

Physical data

Pin spacing	7.5 mm / 0.295 inch
Width	91.8 mm / 3.614 inch
Height	23.6 mm / 0.929 inch
Height from the surface	19.6 mm / 0.772 inch
Depth	24.2 mm / 0.953 inch
Solder pin length	4 mm
Solder pin dimensions	1.5 x 1 mm
Drilled hole diameter with tolerance	$2^{(+0.1)}$ mm

Mechanical data

Mounting type	Feed-through mounting

PCB contact

PCB Contact	THT
Solder pin arrangement	over the entire terminal strip (staggered)
Number of solder pins per potential	1

Material data

Color	gray
Material group	I
Insulation material	Polyamide (PA66)
Flammability class per UL94	V0
Clamping spring material	Chrome nickel spring steel (CrNi)
Contact material	Electrolytic copper (E_{Cu})
Contact plating	tin-plated

Subject to changes. Please also observe the further product documentation!

WAGO Kontakttechnik GmbH & Co. KG
Hansastr. 27
32423 Minden
Phone: +49571 887-0 | Fax: +49571 887-169
Email: info.de@wago.com | Web: www.wago.com

Do you have any questions about our products?
We are always happy to take your call at +49 (571) 887-44222.

Weight	46.3 g

Environmental requirements

Limit temperature range	-60 … +105 °C

Commercial data

Packaging type	BOX
Country of origin	DE
GTIN	4055143587259
Customs tariff number	85369010000

Approvals / Certificates

Country specific Approvals

Logo	Approval	Additional Approval Text	Certificate name
	CB DEKRA Certification B.V.	IEC 60947-7-4	NL-64739
	CSA DEKRA Certification B.V.	C22.2	70146882
	KEMA/KEUR DEKRA Certification B.V.	EN 60947-7-4	71-113203

UL-Approvals

Logo	Approval	Additional Approval Text	Certificate name
	cURus Underwriters Laboratories Inc.	UL 1059	E45172

Compatible products

ferrule

	Item no.: 216-108 Ferrule; Sleeve for 6 mm² / AWG 10; uninsulated; electro-tin plated; silver-colored	www.wago.com/216-108
	Item no.: 216-208	

Subject to changes. Please also observe the further product documentation!

WAGO Kontakttechnik GmbH & Co. KG
Hansastr. 27
32423 Minden
Phone: +49571 887-0 | Fax: +49571 887-169
Email: info.de@wago.com | Web: www.wago.com

Do you have any questions about our products?
We are always happy to take your call at +49 (571) 887-44222.

	Ferrule; Sleeve for 6 mm² / AWG 10; insulated; electro-tin plated; electrolytic copper; gastight crimped; acc. to DIN 46228, Part 4/09.90; yellow	www.wago.com/216-208
	Item no.: 216-263 Ferrule; Sleeve for 1 mm² / AWG 18; insulated; electro-tin plated; electrolytic copper; gastight crimped; acc. to DIN 46228, Part 4/09.90; red	www.wago.com/216-263
	Item no.: 216-264 Ferrule; Sleeve for 1.5 mm² / AWG 16; insulated; electro-tin plated; electrolytic copper; gastight crimped; acc. to DIN 46228, Part 4/09.90; black	www.wago.com/216-264
	Item no.: 216-266 Ferrule; Sleeve for 2.5 mm² / AWG 14; insulated; electro-tin plated; electrolytic copper; gastight crimped; acc. to DIN 46228, Part 4/09.90; blue	www.wago.com/216-266
	Item no.: 216-267 Ferrule; Sleeve for 4 mm² / AWG 12; insulated; electro-tin plated; electrolytic copper; gastight crimped; acc. to DIN 46228, Part 4/09.90; gray	www.wago.com/216-267
tools		
	Item no.: 210-721 Operating tool; Blade: 5.5 x 0.8 mm; with a partially insulated shaft; multicoloured	www.wago.com/210-721

Downloads

Documentation

Additional Information

Technical explanations	3. 4. 2019	pdf 2.0 MB	Download

CAD/CAE-Data

PCB Design

Symbol and Footprint 2626-1112/020-000 CAx data for your PCB design, consisting of "schematic symbols and PCB footprints", allow easy integration of the WAGO component into your development environment.	URL	Download

Supported formats:

- Accel EDA 14 & 15
- Altium 6 to current version
- Cadence Allegro
- DesignSpark
- Eagle Libraries
- KiCad
- Mentor Graphics BoardStation
- Mentor Graphics Design Architect

WAGO Kontakttechnik GmbH & Co. KG
Hansastr. 27
32423 Minden
Phone: +49571 887-0 | Fax: +49571 887-169
Email: info.de@wago.com | Web: www.wago.com

- Mentor Graphics Design Expedition 99 and 2000
- OrCAD 9.X PCB and Capture
- PADS PowerPCB 3, 3.5, 4.X, and 5.X
- PADS PowerPCB and PowerLogic 3.0
- PCAD 2000, 2001, 2002, 2004, and 2006
- Pulsonix 8.5 or newer
- STL
- 3D STEP
- TARGET 3001!
- View Logic ViewDraw
- Quadcept
- Zuken CadStar 3 and 4
- Zuken CR-5000 and CR-8000

PCB Component Libraries (EDA), PCB CAD Library Ultra Librarian

CAE data

ZUKEN Portal 2626-1112/020-000	URL	Download

CAD data

2D/3D Models 2626-1112/020-000	URL	Download

Environmental Product Compliance

Compliance Search

Environmental Product Compliance 2626-1112/020-000 PCB terminal block; 6 mm²; Pin spacing 7.5 mm; 12-pole; Push-in CAGE CLAMP®; 6,00 mm²; gray	URL	Download

Installation Notes

WAGO Kontakttechnik GmbH & Co. KG
Hansastr. 27
32423 Minden
Phone: +49571 887-0 | Fax: +49571 887-169
Email: info.de@wago.com | Web: www.wago.com