mikroElektronika
DEVELOPMENT TOOLS - COMPILERS - BOOKS
WEB: www.mikroe.com
FORUM: www.mikroe.com/forum

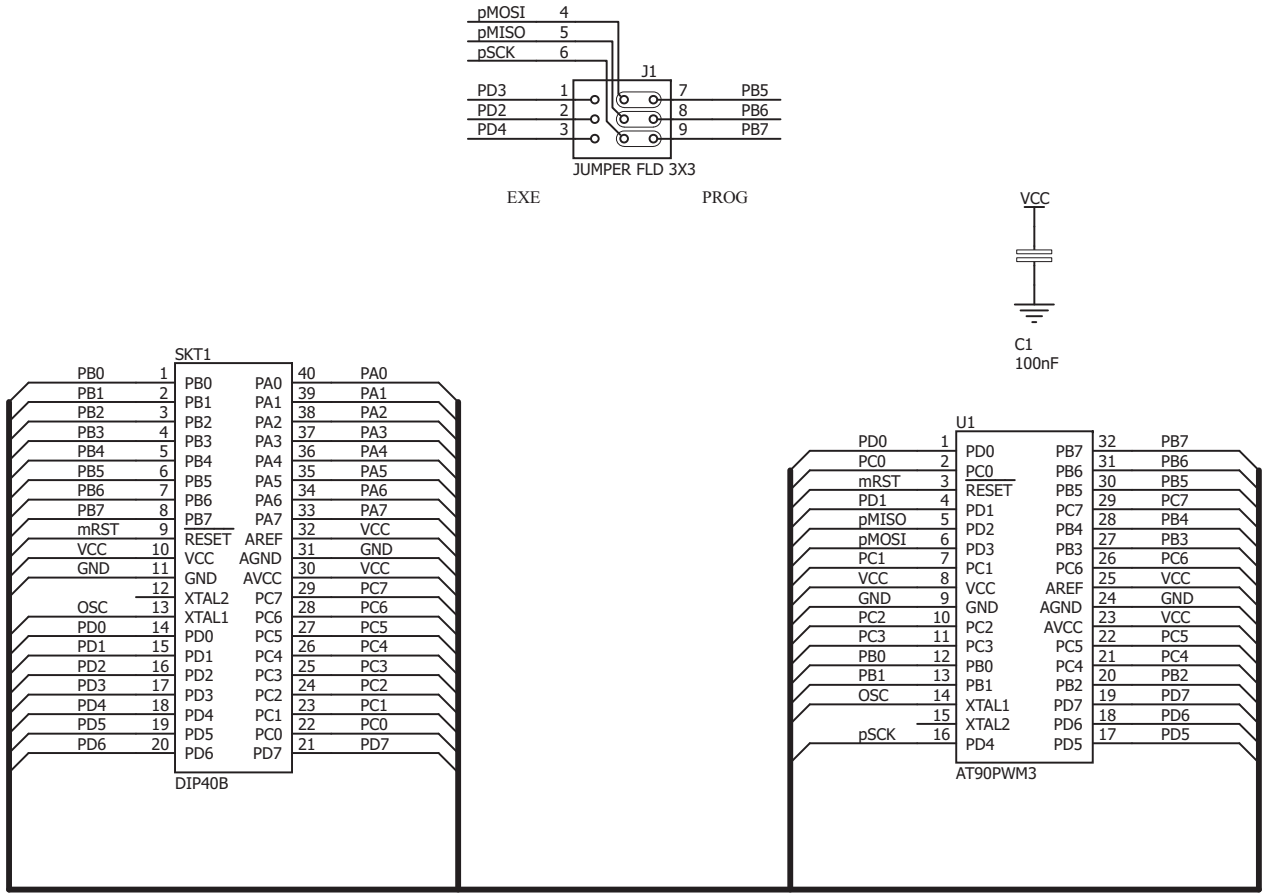

AT90PWM3 To DIP40B Adapter Schematic v100

MikroElektronika Development systems