THIS DOCUMENT IS THE PROPERTY OF KEYSTONE ELECTRONICS CORP. AND SHALL NOT BE REPRODUCED, DISTRIBUTED OR USED AS A BASIS FOR MANUFACTURE WITHOUT PRIOR WRITTEN PERMISSION FROM KEYSTONE ELECTRONICS CORP.

MOUNTING PAD LAYOUT. REQUIRED SPACING FOR 'AAA' OR 'N' BATTERIES

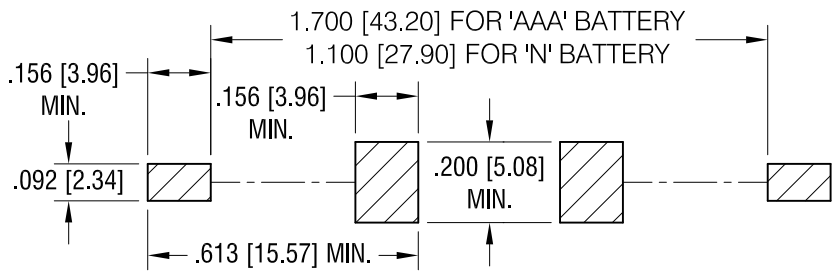

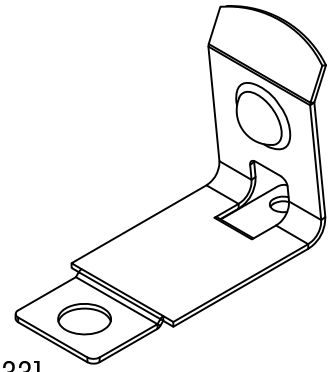

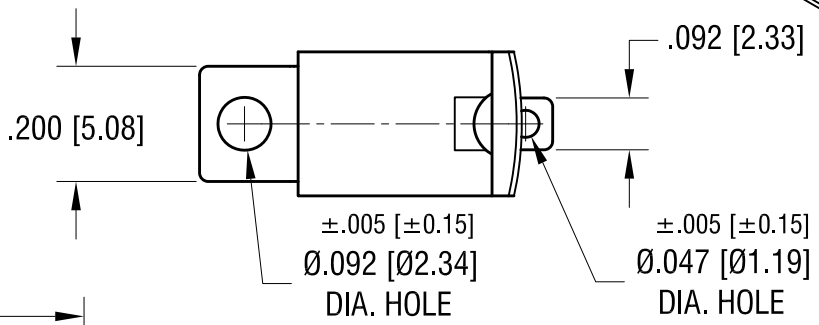

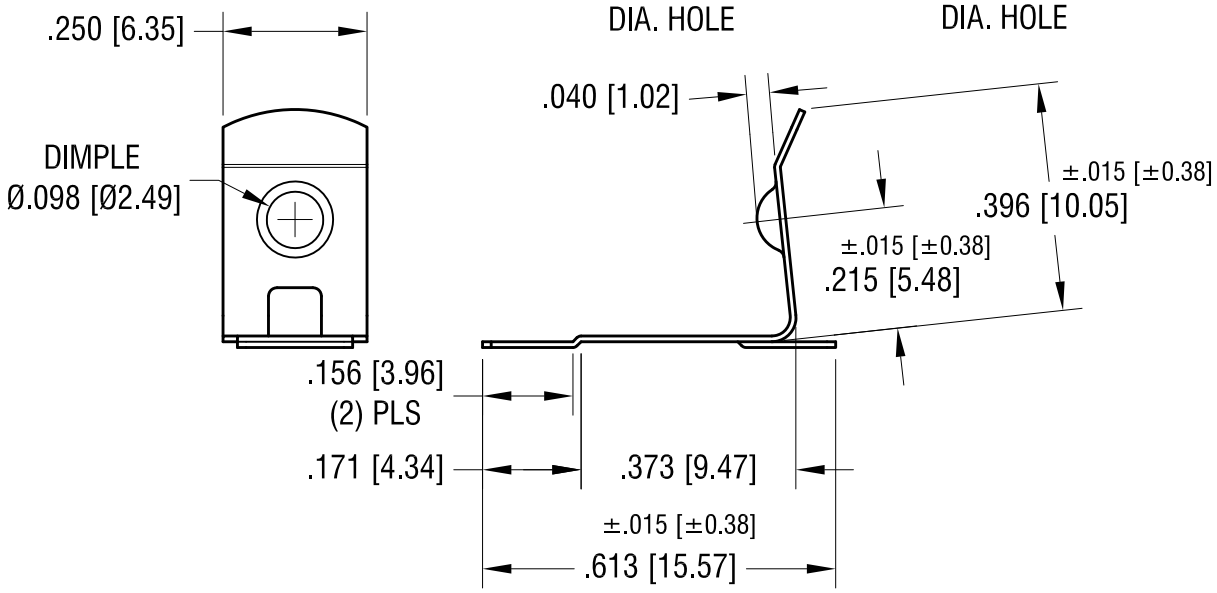

NOTE:

1. HEAT TREAT TO SPRING TEMPER.

DATE	DESCRIPTION	REV.

KEYSTONE ELECTRONICS CORP.

www.keyelco.com • ASTORIA, N.Y. 11105-2017 • Tel (718) 956-8900

PART NAME: 'AAA' SMT BATTERY CLIP			
MATERIAL: .010 [0.25] TH'K ANNEALED SPRING STEEL			
FINISH: TIN NICKEL PLATE	DRN BY: NT	DATE: 3.30.10	
	APP'D:	SCALE: 3X	
TOLERANCES INCH [MM] DECIMAL ± .010 [± 0.25] ANGULAR ± 1° UNLESS OTHERWISE SPECIFIED	CODE: C	DWG NO. 56	