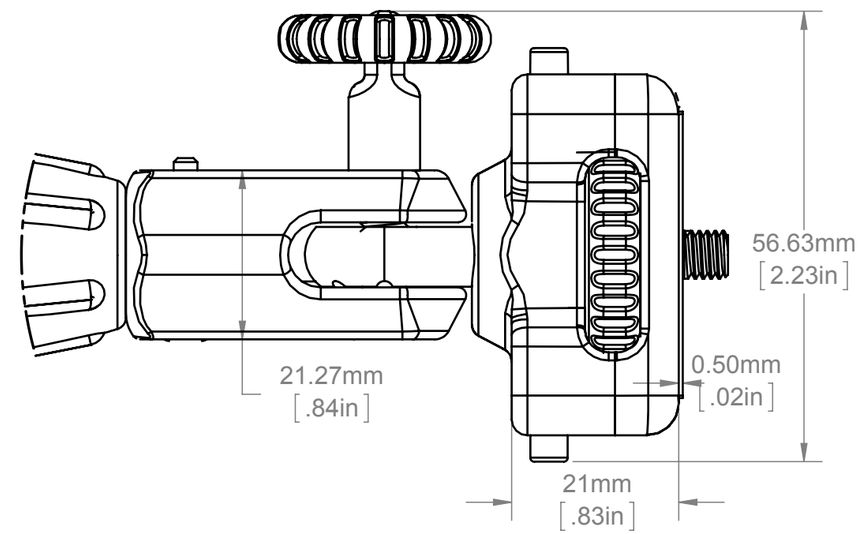

DETAIL A
SCALE 2 : 1.5