THIS DRAWING IS UNPUBLISHED.
VERTRAULICHE UNVEROEFFENTLICHTE ZEICHNUNG
© COPYRIGHT 2000 BY AMP INCORPORATED. ALL RIGHTS RESERVED. ALLE RECHTE VORBEHALTEN

RELEASED FOR PUBLICATION ,2000.
FREI FÜR VEROEFFENTLICHUNG

MATED WITH:
PASSEND ZU:
—

LOC A1 | DIST —
PROJEKT NR.: —

REVISIONS
ÄNDERUNGEN

P	LTR	DESCRIPTION BESCHREIBUNG	DATE	DWN	APVD
	B3	NEW PN ADDED/TOLERANCE CORRECTED	16.Jun.03	ABRAHAM.G.	BRUNNER.M.
	B4	NEW PN ADDED	15.Oct.03	ABRAHAM.G.	BRUNNER.M.
	B5	NEW DASH NUMBERS ADDED	15.Apr.05	ABRAHAM.G.	BRUNNER.M.
	B6	NEW PN 1241978-1 ADDED	20.FEB.07	ABRAHAM.G.	BRUNNER.M.
	B7	NEW PN 1719534-4 AND 4-1719534-1 ADDED	20.FEB.07	ABRAHAM.G.	BRUNNER.M.
	B8	NEW PN 2-1564326-1 AND 2-1564326-1 ADDED	01AUG08	ABRAHAM.G.	BRUNNER.M.
	B9	DASH NUMBER ADDED	06AUG08	MEYER,D.	BRUNNER.M.

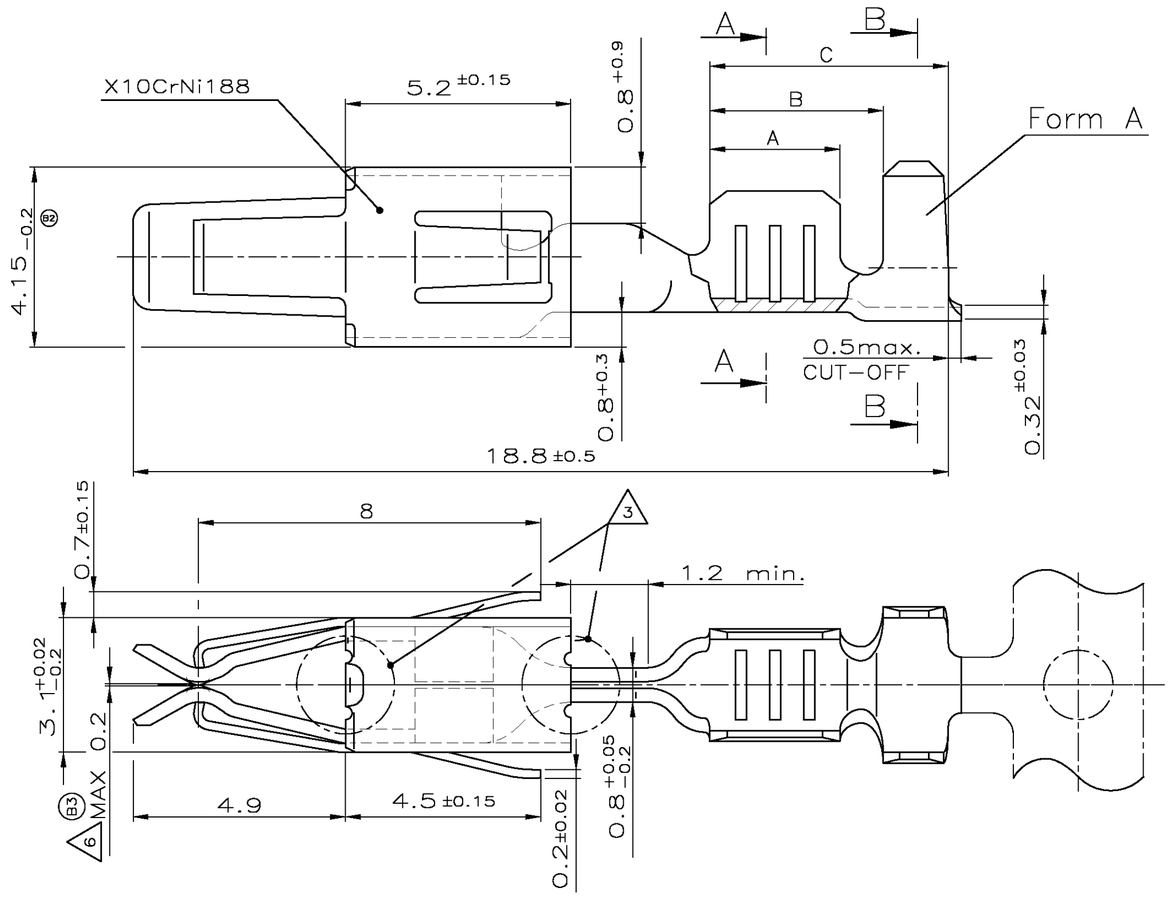

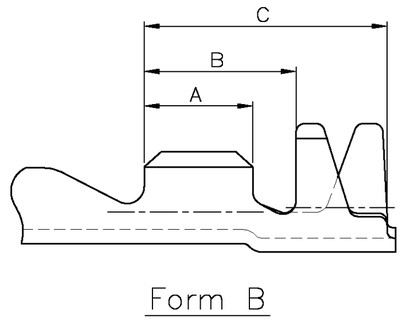

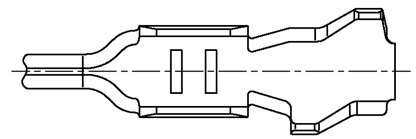

CONTACTS FOR FLR-CABLE
Kontakte für FLR-Leitung

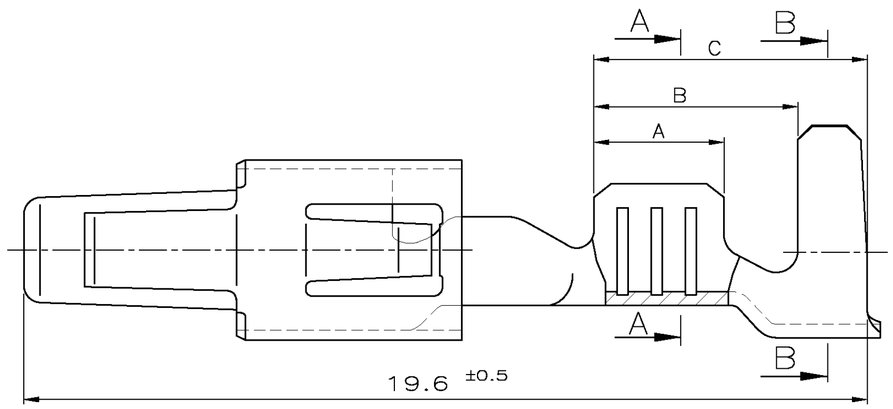

Section B-B
Schnitt B-B

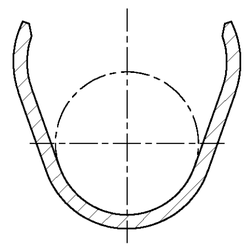

CONTACTS FOR SINGLE WIRE SEALING SYSTEM: FLR- AND FLK-CABLE
Kontakte für Einzel-Dichtungs-System: FLR- und FLK-Leitung

DIMENSIONS SEE FIGURE CONTACTS FOR FLR-CABLE
Maße siehe Darstellung der Kontakte für FLR-Leitung

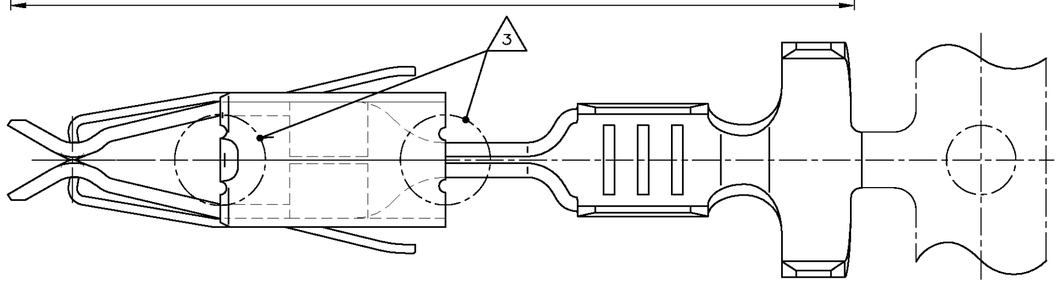

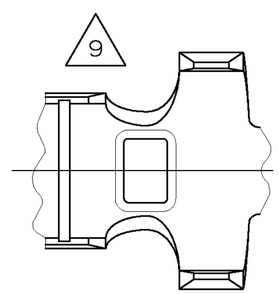

THIS DRAWING IS A CONTROLLED DOCUMENT FOR AMP INCORPORATED. IT IS SUBJECT TO CHANGE AND THE CONTROLLING ENGINEERING ORGANIZATION SHOULD BE CONTACTED FOR THE LATEST REVISION.
DIESES ZEICHNUNGSDOKUMENT WIRD DURCH AMP INCORPORATED KONTROLLIERT. ÄENDERUNGEN, DIE DEM TECHNISCHEN FORTSCHRITT DIENEN, SIND VORBEHALTEN. DEN JEWEILS LETZTGÜLTIGEN ÄENDERUNGSSTAND ERFAHREN SIE AUF ANFRAGE.

DIMENSIONS: DIMENSIONEN: mm

TOLERANCES UNLESS OTHERWISE SPECIFIED: ALLGEMEINTOLERANZEN
n. ISO 8015
n. ISO 2768 - mH -E
n. DIN 16901 -140
0 PLC ±±±±
1 PLC ±
2 PLC ±
3 PLC ±
ANGLES/WINKEL ±

MATERIAL —
FINISH/OBERFLAECHE/FARBE —

DWN 18-AUG-00 M.Pfeilschifter
CHK 18-AUG-00 V.Huhn
APVD 02-Jun-03 M.Bleicher
PRODUCT SPEC PRODUKTSPEZ. 108-18013
APPLICATION SPEC VERABEITUNGSSPEZ. 114-18050
WEIGHT GEWICHT —

Tyco Electronics
tyco Electronics AMP GmbH
D - 64625 Bensheim

NAME
Junior Power Timer Typ A
Product Group Drawing
JPT Typ A Kundensammelzeichnung

SIZE	CAGE CODE	DRAWING NO ZEICHNUNGS-NR.	RESTRICTED TO NUR FÜER
A2	00779	C-1355047	—

CUSTOMER DRAWING /KUNDENZEICHNUNG
MASSSTAB 10:1 | BLATT 1 | OF VON 2 | REV B9

THIS DRAWING IS UNPUBLISHED.
VERTRAULICHE UNVEROEFFENTLICHTE ZEICHNUNG
© COPYRIGHT 2000
BY AMP INCORPORATED. ALL RIGHTS RESERVED.
ALL RECHTE VORBEHALTEN

RELEASED FOR PUBLICATION ,2000.
FREI FÜR VEROEFFENTLICHUNG

MATED WITH:
PASSEND ZU:
—

LOC	DIST
A1	—

PROJEKT NR.: —

REVISIONS
ÄNDERUNGEN

P	LTR	DESCRIPTION BESCHREIBUNG	DATE	DWN	APVD
	–	SEE SHEET 1	–	–	–

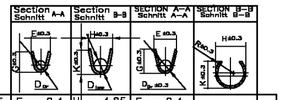

9	2–1564326–1	A	2–1564327–1	0.35	SEAL	CuSn4	△1	A = 2.5 B = 4.7 C = 6.3	E = 2.4 G = 2.3 D_{pr} = 1.0	H = 4.85 K = 4.5 D_{ins} = 3.2	E = 2.4 G = 2.3 D_{ie} = 1.0		Single wire sealing system △2	Hand tool (Handzange) 169400–0	Insert (Matrize) 539614–1	968 107–1	see Applicationspecification siehe Verarbeitungsspezifikation 114–18050
9	4–1719534–1		4–1719535–1	AWG 12	3.0–3.8 3.4 (SEAL)	CuNiSi	△1	A = 3.5 B = 5.7 C = 7.3	E = 4.0 G = 4.2 D_{pr} = 2.0	H = 5.45 K = 5.0 D_{ins} = 3.5	E = 4.0 G = 4.2 D_{ie} = 2.0						
	1719534–4		1719535–4			CuNiSi	△3										
5	4–1241872–1	A	4–1241873–1	>1.0–2.5	2.2–3.0	CuNiSi	△1	A = 3.5 B = 5.2 C = 6.8	E = 3.6 G = 3.8 D_{pr} = 1.8	H = 5.3 K = 5.0 D_{ins} = 3.5	E = 2.8 G = 3.9 D_{ie} = 1.7	H = 4.8 K = 4.5 R = 2.8					
	–	–	–			–											
	–	–	–			–											
	–	–	–			–	–										
	1241872–1	A	1241873–1			CuFe 2	tin plated vorverzinnt										
5	4–1241868–1	A	4–1241869–1	0.5–1.0	1.4–2.7	CuNiSi	△1	A = 3.0 B = 4.7 C = 6.3	E = 2.5 G = 2.7 D_{pr} = 1.2	H = 5.1 K = 4.8 D_{ins} = 3.3	E = 2.2 G = 2.8 D_{ie} = 1.2	H = 4.4 K = 4.2 R = 2.6					
	–	–	–			–											
	–	–	–			–											
	–	–	–			–	–										
	1241868–1	A	1241869–1			CuFe 2	tin plated vorverzinnt										
5	4–1241864–1	A	4–1241865–1	0.2–0.5	1.2–2.3	CuNiSi	△1	A = 2.5 B = 4.7 C = 6.3	E = 2.1 G = 2.1 D_{pr} = 0.8	H = 4.7 K = 4.5 D_{ins} = 3.2	E = 1.7 G = 2.15 D_{ie} = 0.8	H = 4.2 K =4.15 R = 2.4					
	–	–	–			–											
	–	–	–			–											
	1241864–1	A	1241865–1			CuFe 2	tin plated vorverzinnt										
	6–964273–6	F	–	>1.0–2.5	2.2–3.0	CuSn 4	△1 △4	A = 3.5 B = 5.2 C = 6.8	E = 3.6 G = 3.8 D_{pr} = 1.8	H = 5.3 K = 5.0 D_{ins} = 3.5	E = 2.8 G = 3.9 D_{ie} = 1.7	H = 4.8 K = 4.5 R = 2.8					
	4–964273–1	F	964287–6			CuNiSi	△1										
	3–964273–1	F	964287–5			CuNiSi	△1										
	2–964273–1	F	964287–4			CuSn 4	△1										
	1–964273–1	F	964287–3			CuFe 2	△1										
	964273–2	F	964287–2			CuSn 4	tin plated vorverzinnt										
	964273–1	F	964287–1			CuFe 2	tin plated vorverzinnt										
	6–964286–6	F	–	0.5–1.0	1.4–2.7	CuSn 4	△1 △4	A = 3.0 B = 4.7 C = 6.3	E = 2.5 G = 2.7 D_{pr} = 1.2	H = 5.1 K = 4.8 D_{ins} = 3.3	E = 2.2 G = 2.8 D_{ie} = 1.2	H = 4.4 K = 4.2 R = 2.6					
	4–964286–1	F	964285–5			CuNiSi	△1										
	2–964286–1	F	964285–4			CuSn 4	△1										
	1–964286–1	F	964285–3			CuFe 2	△1										
	964286–2	F	964285–2			CuSn 4	tin plated vorverzinnt										
	964286–1	F	964285–1			CuFe 2	tin plated vorverzinnt										
	6–964282–6	F	–	0.2–0.5	1.2–2.3	CuSn 4	△1 △4	A = 2.5 B = 4.7 C = 6.3	E = 2.1 G = 2.1 D_{pr} = 0.8	H = 4.7 K = 4.5 D_{ins} = 3.2	E = 1.7 G = 2.15 D_{ie} = 0.8	H = 4.2 K=4.15 R = 2.4					
	4–964282–1	F	964281–5			CuNiSi	△1										
	2–964282–1	F	964281–4			CuSn 4	△1										
	1–964282–1	F	964281–3			CuFe 2	△1										
	964282–2	F	964281–2			CuSn 4	tin plated vorverzinnt										
	964282–1	F	964281–1			CuFe 2	tin plated vorverzinnt										
5	4–1241870–1	A	4–1241871–1	>1.0–2.5	2.2–3.0	CuNiSi	△1	A = 3.3 B = 4.3 C = 5.8	E = 3.6 G = 3.8 D_{pr} = 1.8	H = 4.7 K = 4.9 D_{ins} = 2.6 Form A	E = 2.8 G = 3.9 D_{ie} = 1.7	H = 3.8 K = 4.3 R = 2.3	FLR – Cable / Leitung	Hand tool (Handzange) 169400–0	Insert (Matrize) 539613–1		
	–	–	–			–											
	–	–	–			–											
	1241870–2	A	1241871–2			CuSn 4	tin plated										
	1241870–1	A	1241871–1			CuFe 2	tin plated vorverzinnt										
5	4–1241866–1	A	4–1241867–1	0.5–1.0	1.4–2.1	CuNiSi	△1	A = 3.0 B = 4.0 C = 5.5	E = 2.5 G = 2.7 D_{pr} = 1.2	H = 3.7 K = 3.9 D_{ins} = 1.8 Form A	E = 2.2 G = 2.8 D_{ie} = 1.2	H = 2.8 K = 3.5 R = 1.6					
	–	–	–			–											
	–	–	–			–											
	1241866–2	A	1241867–2			CuSn 4	tin plated vorverzinnt										
	1241866–1	A	1241867–1			CuFe 2	tin plated vorverzinnt										
5	4–1241862–1	A	4–1241863–1	0.2–0.5	1.15–1.6	CuNiSi	△1	A = 2.5 B = 3.5 C = 5.6	E = 2.1 G = 2.1 D_{pr} = 0.8	H = 2.7 K = 2.8 D_{ins} = 1.4 Form B	E = 1.7 G = 2.15 D_{ie} = 0.8	H = 2.5 K = 2.4 R = 1.4					
	–	–	–			–											
	–	–	–			–											
	–	–	–			–	–										
	1241862–1	A	1241863–1			CuFe 2	tin plated vorverzinnt										
	–	–	–	>2.5–4.0	2.7–3.7	–		A = 3.6 B = 5.0 C = 6.5	E = 4.5 G = 4.7 D_{pr} = 2.3	H = 5.8 K = 6.0 D_{ins} = 3.3 Form A	E = 3.4 G = 4.8 D_{ie} = 2.3	H = 4.4 K = 5.1 R = 2.6		–	–		
	–	–	–			–											
	–	–	–			–											
	1241978–2	A	1241977–2			CuSn 4	tin plated vorverzinnt										
	1241978–1	A	1241977–1			CuFe 2	pretin vorverzinnt										
	4–965999–1	F	964346–5	>1.0–2.5	2.2–3.0	CuNiSi	△1	A = 3.3 B = 4.3 C = 5.8	E = 3.6 G = 3.8 D_{pr} = 1.8	H = 4.7 K = 4.9 D_{ins} = 2.6 Form A	E = 2.8 G = 3.9 D_{ie} = 1.7	H = 3.8 K = 4.3 R = 2.3		Hand tool (Handzange) 169400–0	Insert (Matrize) 539613–1		
	2–965999–1	F	964346–4			CuSn 4	△1										
	1–965999–1	F	964346–3			CuFe 2	△1										
	965999–6	A	964346–6			CuSn 4	△1										
	965999–2	F	964346–2			CuSn 4	tin plated vorverzinnt										
	965999–1	F	964346–1			CuFe 2	tin plated vorverzinnt										
	4–964284–1	F	964283–5	0.5–1.0	1.4–2.1	CuNiSi	△1	A = 3.0 B = 4.0 C = 5.5	E = 2.5 G = 2.7 D_{pr} = 1.2	H = 3.7 K = 3.9 D_{ins} = 1.8 Form A	E = 2.2 G = 2.8 D_{ie} = 1.2	H = 2.8 K = 3.5 R = 1.6					
	2–964284–1	F	964283–4			CuSn 4	△1										
	1–964284–1	F	964283–3			CuFe 2	△1										
	964284–6	A	964283–6			CuSn 4	△1										
	964284–2	F	964283–2			CuSn 4	tin plated vorverzinnt										
	964284–1	F	964283–1			CuFe 2	tin plated vorverzinnt										
	4–964280–1	F	964279–5	0.2–0.5	1.15–1.6	CuNiSi	△1	A = 2.5 B = 3.5 C = 5.6	E = 2.1 G = 2.1 D_{pr} = 0.8	H = 2.7 K = 2.8 D_{ins} = 1.4 Form B	E = 1.7 G = 2.15 D_{ie} = 0.8	H = 2.5 K = 2.4 R = 1.4					
	2–964280–1	F	964279–4			CuSn 4	△1										
	1–964280–1	F	964279–3			CuFe 2	△1										
	964280–2	F	964279–2			CuSn 4	tin plated vorverzinnt										
	964280–1	F	964279–1			CuFe 2	tin plated vorverzinnt										
REMARK Bemerkung	Order No. BESTELL– NR. Strip BANDWARE	Rev.	Order No. BESTELL– NR. Loose piece Einzelaus–führung	Wire Range Drahtgröße en Bereich (mm²)	Insulation Ø Isolations ø (mm)	Material Werkstoff	Surface Oberfläche	Lenght Länge	Wire crimp Drahtcrimp	Insul.crimp Iso'crimp	Wire crimp Drahtcrimp	Insul.crimp Iso'crimp		Order No. BESTELL– NR. Tool/Insert Handzange/Matrize Loose piece Für Einzelausführung		Order No. BESTELL– NR. Extraction tool Ausziehwerkzeug	Crimp data and Crimp tool Crimpdaten u. Crimpwerkzeuge
								Crimp Dimension Crimpabmessungen (mm)									

Single Wire Seal Einzel–Dichtung △2		
963292–1	2.7–3.0	yellow gelb
963293–1	2.0–2.7	redbrown rotbraun
963294–1	1.2–2.1	blue blau
828905–1	2.2–3.0	white weiss
—	—	— —
ORDER NO. BESTELL– NR.	Insulation Ø Isolations ø	Colour Farbe

963292 / 93 / 94

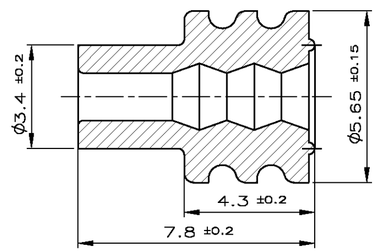

828905

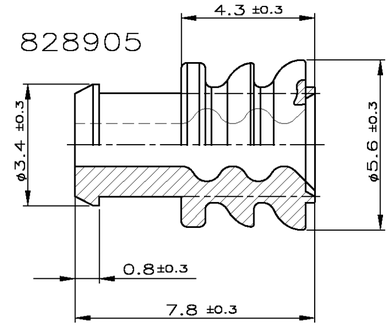

NOTES
Bemerkungen

△1 BODY ELECTRO TIN PLATED OVER NICKEL 0.2 µm min.
Kontaktkoerper gal. verzinnt ueber Nickel
CONTACT AREA SELECTIV GOLD OVER NICKEL 0.8 µm min.
Kontaktzone selectiv vergoldet ueber Nickel
WIRE CRIMP AREA ELECTRO TIN PLATED 1 µm min.
Drahtcrimpbereich galv. verzinnt

△2 ACCORDING INSULATION ϕ IS TO CHOOSE THE SINGLE WIRE SEAL
Entsprechend dem Isolationsdurchmesser ist die Einzel–Dichtung auszuwaehlen

△3 CUT OFF OPTIONAL
Optionaler Federabschnitt

△4 INSULATION BARREL DESIGN OPTIONAL
Ausfuehrung Isolationshuelse wahlweise

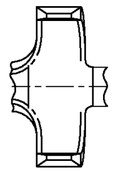

△5 VARIANTS WITH GAP–SIZE 0.3mm
Varianten mit Gap–Size 0.3mm

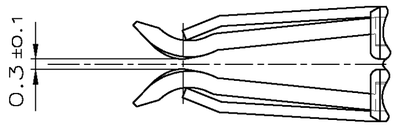

B3 △6 FOR EVALUATION OF THE GAP–SIZE, THE MATING–FORCE HAS PRIORITY.
Zur Beurteilung des Oeffnungsmasses ist die Steckkraft ausschlaggebend

B5 △7 CONTACT BODY PRE SILVER PLATED MIN. 0.8µm
CONTACT ZONE SELECTIVE PRE SILVER PLATED MIN. 3µm
Kontaktkoerper vorversilbert min. 0.8µm
Kontaktzone selektiv vorversilbert min. 3µm

△8 1–3µm Sn28M LAYER FOR HIGHER TEMPERATURE REQUIREMENTS
1–3µm Sn28M Schicht fuer Hoehere Temperaturanforderungen

△9 PUNCHED WITH VOLATILIZING STAMPING–OIL
Gestanzt mit verfluechtigendem Stanzoel

THIS DRAWING IS A CONTROLLED DOCUMENT FOR AMP INCORPORATED. IT IS SUBJECT TO CHANGE AND THE CONTROLLING ENGINEERING ORGANIZATION SHOULD BE CONTACTED FOR THE LATEST REVISION. DIESES ZEICHNUNGSDOKUMENT WIRD DURCH AMP INCORPORATED KONTROLLIERT, ÄNDERUNGEN, DIE DEM TECHNISCHEN FORTSCHRITT DIENEN, SIND VORBEHALTEN. DEN JEWEILS LETZTGUELTIGEN ÄNDERUNGSSTAND ERFAHREN SIE AUF ANFRAGE.

DIMENSIONS: mm
TOLERANCES UNLESS OTHERWISE SPECIFIED: ALLGEMEINTOLERANZEN
n. ISO 8015
n. ISO 2768 – mH –E
n. DIN 16901 – 140
±0.2mm
ANGLES /WINKEL ±–
FINISH /OBERFLAECHE/FARBE –
MATERIAL –

DWN	M.Pfeilschifter	21–AUG–00
CHK	V. Huhn	21–AUG–00
APVD	M.Bleicher	02–Jun–03
PRODUCT SPEC PRODUKTSPEZ.	108–18013	
APPLICATION SPEC VERARBEITUNGSSPEZ.	114–18050	
WEIGHT GEWICHT	–	

Tyco Electronics
tyco Electronics AMP GmbH
D – 64625 Bensheim

NAME: Junior Power Timer Typ A
Product Group Drawing
JPT Typ A Kundensammelzeichnung

SIZE	CAGE CODE	DRAWING NO ZEICHNUNGS–NR.	RESTRICTED TO NUR FÜER
A2	00779	C–1355047	–

CUSTOMER DRAWING /KUNDENZEICHNUNG | MASSSTAB 10:1 | BLATT 2 OF 2 | REV B9