FiS

OzoneMonitor

# OZONE MONITOR

## equipped with a fan, case, and module.

## For OZONE detection in air purifying, deodorizing, sterilization systems, photocopiers and for environmental monitoring systems

### Features

- Suitable for environmental monitor by detecting 0 to 250ppb of ozone in atmosphere
- Inexpensive by using semiconductor type sensor
- Small wind velocity effect by integrating a fan and module into the case.
- Maintenance free
- Long life

Recently ozone has started to be used in commercial/ domestic applications : e.g. in HVAC (Heating Ventilation and Air Conditioning) systems.

FIS has developed a new semiconductor ozone sensor using an inovative ITO (Indium Tin Oxide) sensing material for ozone detection.

Configuration of the ozone sensor is shown in Figs. 1 and 2. The monitor sensitivity is in Fig. 3, and the response in Fig. 4.

This monitor has two models. One is for the output of 0 to 1V. The other is for 0 to 5V.

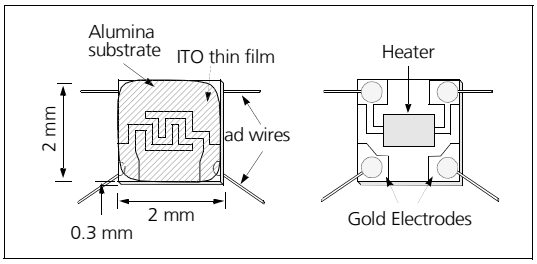


**Fig. 1 Sensing Elements**

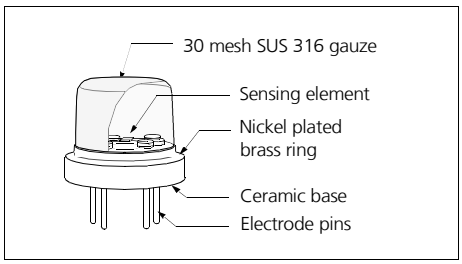


**Fig. 2 Structure**

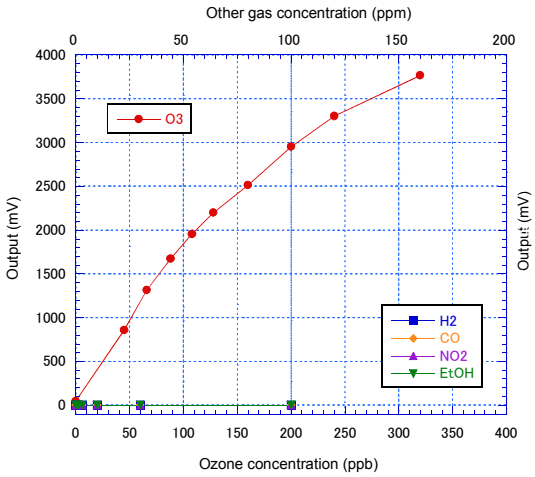


**Fig. 3 Monitor sensitivity characteristics (Output range: 1 to 5V)**

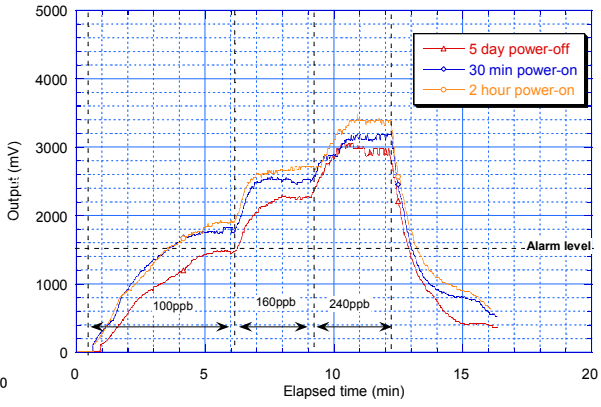


**Fig. 4 Monitor Response (Output range: 1 to 5V)**


FIS Inc.
3-36-3 Kitazono,
Itami, Hyogo.
664-0891 Japan

Tel: +81-72-780-1800
Fax: +81-72-785-0073
http://www.fisinc.co.jp


TECHNICAL NEWS

# Products range of Ozone monitors

| Basic specifications | |
|---|---|
| • Power supply: | 5V DC ± 5% |
| • Initial warm-up time: | About 3 minutes |
| • Sensor: | SP-61 |
| • Detection range: | 0 to 250ppb |
| • Analogue output: | 0 to 1V or 0 to 5V (Cables: AWG24, Length: 50cm) |
| • Alarm output: | MOS output, 5V DC output at ON, no delay alarm, auto-reset |
| • Alarm concentration: | 80ppb of ozone |
| • Power consumption: | Lower than 700mW (400mW for sensor) |
| • Operating temperature: | 0°C to 40°C |
| • Storage temperature: | -10°C to 60°C |
| • Size: | 64(W) x 100(D) x 36(H) mm |
| • Weight: | 80 g |

Note: Only the monitor is available.

| Model | Features | Photo |
|---|---|---|
| **A1320301-SP61-01F** | • Sensor: SP-61<br>• Module: A1320301-SP61-01<br>• Analogue output: 0 to 1V | 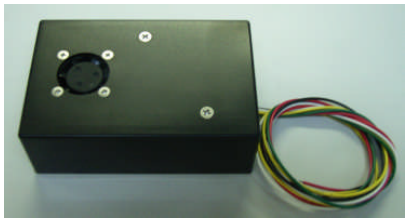 |
| **A1320301-SP61-02F** | • Sensor: SP-61<br>• Module: A1320301-SP61-02<br>• Analogue output: 0 to 5V | |

I/O cables specifications

Cable color
Black: GND for power supply
Red: +5V DC for power supply
White: Analogue output
Yellow: GND for analogue output
Green: Alarm output

Operation procedure
1. Connect cables (Black and Red) to 5V DC power supply.
2. Wait 3 minutes (warm-up).
3. Measure analogue output between cables (White and Yellow) to convert ozone concentration.
4. Disconnect power supply from the monitor when the measurement is finished.

* When the concentration exceeds the alarm level, the alarm output (MOS) turns ON. When the concentration decreases and becomes lower than the alarm level, the alarm output turns OFF.

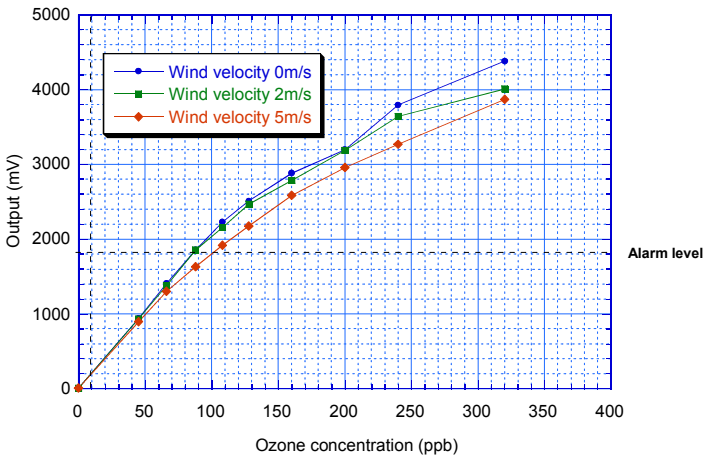


**Fig. 5 Wind influence (Output range: 1 to 5V)**

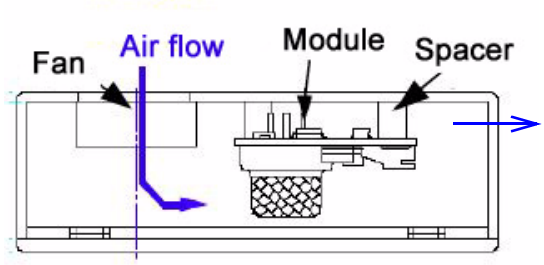


**Fig. 6 Inside monitor**

下ケース

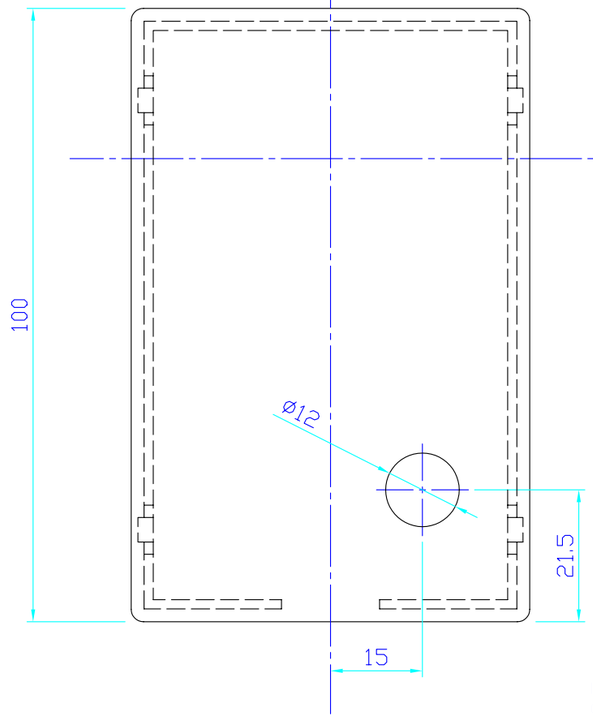


組立図(上ケース側)

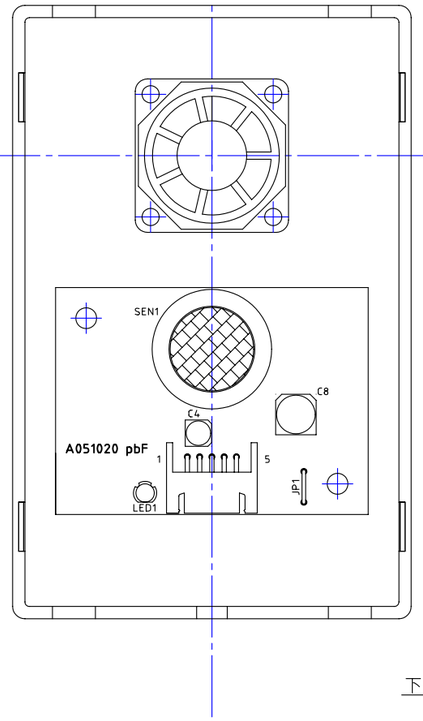


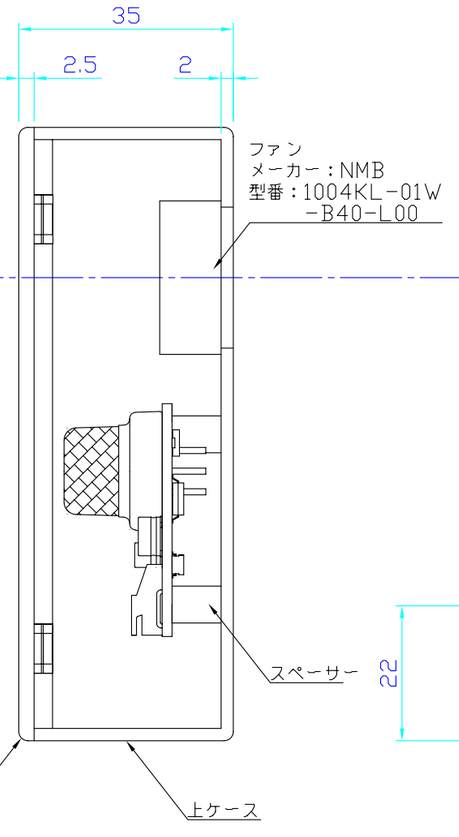


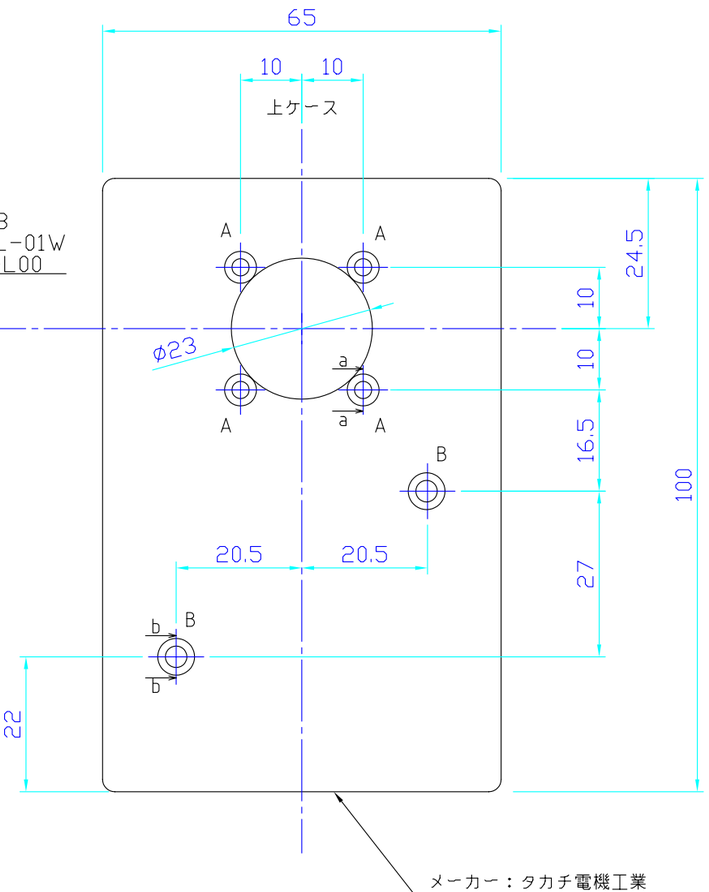


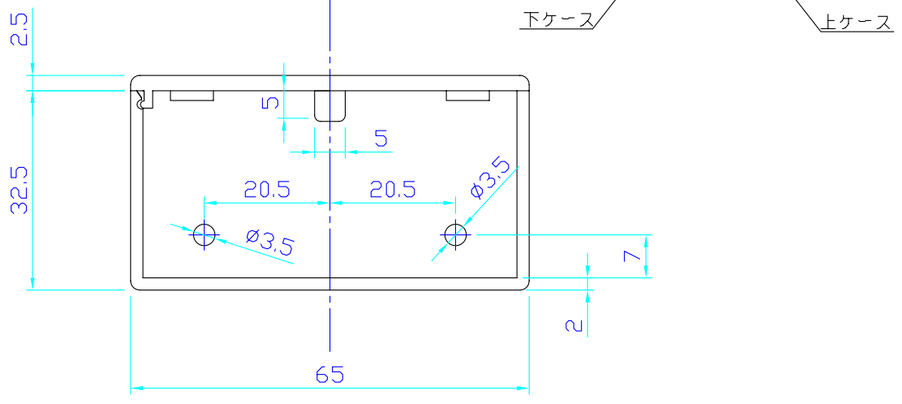


a-a断面図

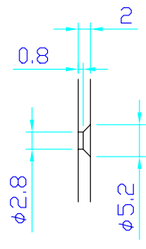


b-b断面図

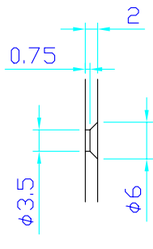


注）：AはM2.6皿ネジ用穴。BはM3皿ネジ用穴。
ケース材質　ABS樹脂

| | | | | | |
|---|---|---|---|---|---|
| 3 | | | | | Material |
| 2 | | | | | Finish |
| 1 | 穴あけ位置変更 | Kuroiwa | Yanagitani | 2007.8.20 | |
| | Revise | Dwg.By | Appr.By | Date | Parts Name: オゾンモジュール / 部品レイアウト図 |
| Draw,By 黒岩 | Date 2007.8.7 | UNIT mm | Scale 1/1 | Q'ty | |
| Check,By 柳谷 | Date 2007.8.7 | | | | |
| Appr,By | Date | | | | Model |
| 客先 一般顧客 | 社内テーマ番号 05012 | FiS Inc. | | | Dwg.No. Z05012BR3_A051020 / REV. |