CM

Chip type, Extremely Low Impedance Long Life Series

Low Impedance Solvent Proof

CD ⟹ CM
Long life

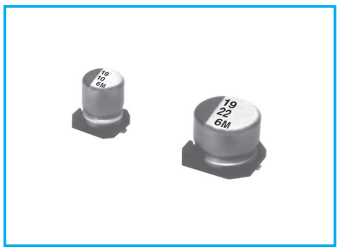

- Chip type, low impedance temperature range up to 105˚C
- Designed for surface mounting on high density PC board
- Applicable to automatic insertion machine using carrier tape
- Complied to the RoHS directive

Item	Characteristics
Operating temperature range	-55 ~ +105˚C
Leakage current max.	I = 0.01CV or 3μA whichever is greater (after 2 minutes)
Capacitance tolerance	±20% at 120Hz, 20˚C
Dissipation factor max. (at 120Hz, 20˚C)	WV: 6.3 / 10 / 16 / 25 / 35 / 50 tanδ: 0.26 / 0.19 / 0.16 / 0.14 / 0.13 / 0.12
Low temperature characteristics (Impedance ratio at 120Hz)	WV: 6.3 / 10 / 16 / 25 / 35 / 50 Z-25˚C/Z+20˚C: 2 / 2 / 2 / 2 / 2 / 2 Z-55˚C/Z+20˚C: 4 / 4 / 4 / 3 / 3 / 3
Load life (after application of the rated voltage for 5000 hours at 105˚C)	Leakage current: Less than specified value Capacitance change: Within ±30% of initial value tanδ: Less than 250% of specified value ØD: ØD ≦ 6.3, Ø8×6.2mmL / ØD ≧ 8 Life time: 3000 hours / 5000 hours
Shelf life (at 105˚C)	After 1000 hours no load test, leakage current, capacitance and tanδ are same as load life value. The measurement shall be performed at 20˚C by the KS C 6035 clause 5.4.
Resistance to soldering heat	The following specifications shall be satisfied when the capacitors are restored to 20˚C after exposing them at 250˚C for 10 seconds. Leakage current: Less than specified value Capacitance change: Within ±10% of initial value tanδ: Less than specified value

● DRAWING

Unit : mm

-Series code of CM is “M”

(Ø6.3×5.8, 7.7, Ø8×6.2)

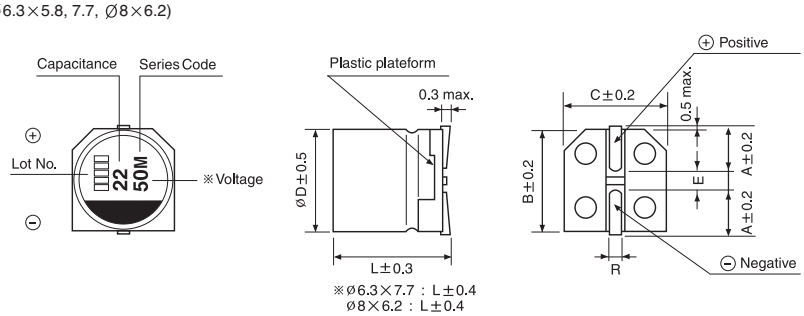

ØD	A	B	C	E	R
6.3×5.8	2.4	6.6	6.6	2.2	0.5~0.8
6.3×7.7	2.4	6.6	6.6	2.2	0.5~0.8
8×6.2	3.3	8.3	8.3	2.3	0.5~0.8
8×10	2.9	8.3	8.3	3.1	0.8~1.1
10×10	3.2	10.3	10.3	4.5	0.8~1.1

(Ø8×10, Ø10×10)

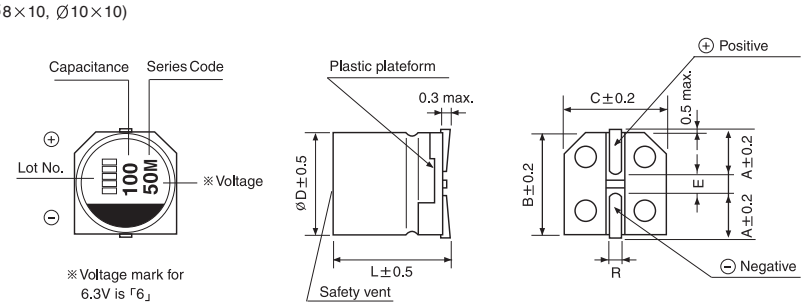

CHIP TYPES

CM series

● DIMENSIONS & MAXIMUM PERMISSIBLE RIPPLE CURRENT

μF \ WV	6.3			10			16			25			35			50		
10																6.3×5.8	0.86	170
15																6.3×5.8	0.86	170
22																6.3×5.8	0.86	170
33							6.3×5.8	0.39	240	6.3×5.8	0.39	240	6.3×5.8	0.39	240	6.3×7.7	0.66	280
																8×6.2	0.63	300
47				6.3×5.8	0.39	240	6.3×5.8	0.39	240	6.3×5.8	0.39	240	6.3×5.8	0.39	240	6.3×7.7	0.66	280
																8×6.2	0.63	300
68	6.3×5.8	0.36	240	6.3×5.8	0.36	240	6.3×5.8	0.36	240	6.3×5.8	0.36	240	6.3×7.7	0.32	290	8×10	0.32	350
100	6.3×5.8	0.36	240	6.3×5.8	0.36	240	6.3×5.8	0.36	240	6.3×7.7	0.32	290	8×10	0.16	600	10×10	0.16	700
										8×6.2	0.26	300						
150	6.3×5.8	0.36	240	6.3×5.8	0.36	240	6.3×7.7	0.32	290	8×10	0.16	600	8×10	0.16	600			
220	6.3×5.8	0.36	240	6.3×7.7	0.36	290	6.3×7.7	0.32	290	8×10	0.16	600	10×10	0.08	850			
				8×6.2	0.26	300	8×6.2	0.26	300									
330	6.3×7.7	0.32	290	8×10	0.16	600	8×10	0.16	600	10×10	0.1	850						
	8×6.2	0.26	300															
470	8×10	0.16	600	8×10	0.16	600	10×10	0.08	850									
680	8×10	0.16	600	10×10	0.08	850												
1000	10×10	0.08	850															

Ripple current (mA rms) at 105°C, 100kHz

Impedance (Ω) at 20°C, 100kHz

Case size ØD x L (mm)

● FREQUENCY COEFFICIENT OF PERMISSIBLE RIPPLE CURRENT

Frequency	50Hz	120Hz	300Hz	1kHz	10kHz≦
Coefficient	0.35	0.5	0.64	0.83	1.00