THIS DOCUMENT IS THE PROPERTY OF KEYSTONE ELECTRONICS CORP. AND SHALL NOT BE REPRODUCED, DISTRIBUTED OR USED AS A BASIS FOR MANUFACTURE WITHOUT PRIOR WRITTEN PERMISSION FROM KEYSTONE ELECTRONICS CORP.

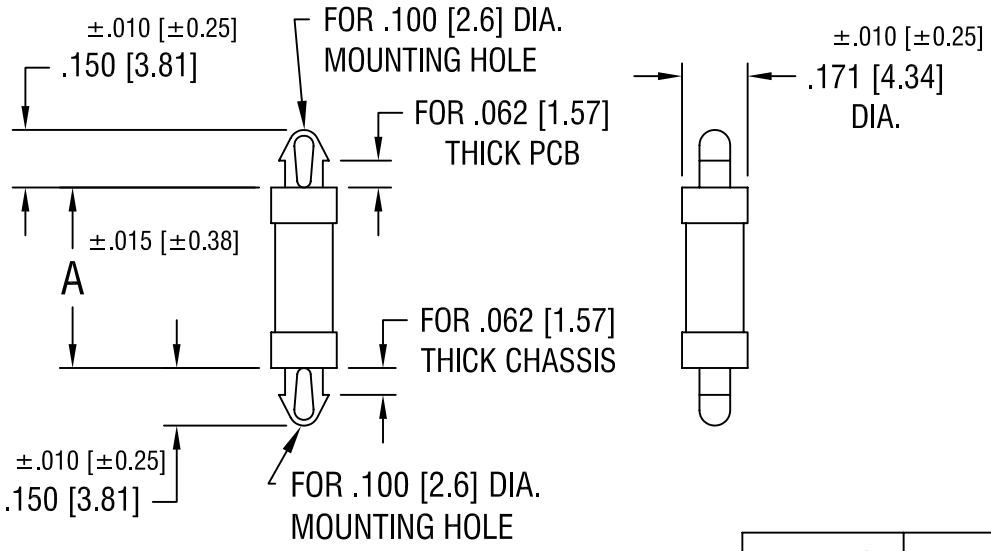

PART NO.	'A' DIM.
8888	.125 [3.18]
8889	.187 [4.75]
8890	.250 [6.35]
8891	.375 [9.52]
8892	.500 [12.70]
8893	.625 [15.87]

DATE	DESCRIPTION	REV.
1.10.08	CHANGE AS PER ECN 08–042	A

KEYSTONE ELECTRONICS CORP.
ASTORIA, N.Y. 11105-2017

PART NAME: PC LOCK-IN SUPPORT

MATERIAL: NYLON UL 94V-0

FINISH: -

DRN BY: BOONE | DATE: 8.29.06

APP'D: LN | SCALE: 2X

TOLERANCES INCH [MM]
DECIMAL ± .005 [± 0.15]
ANGULAR ± 1°
UNLESS OTHERWISE SPECIFIED

CODE: C/M

DWG NO. 8888-8893