THIS DOCUMENT IS THE PROPERTY OF KEYSTONE ELECTRONICS CORP. AND SHALL NOT BE REPRODUCED, DISTRIBUTED OR USED AS A BASIS FOR MANUFACTURE WITHOUT PRIOR WRITTEN PERMISSION FROM KEYSTONE ELECTRONICS CORP.

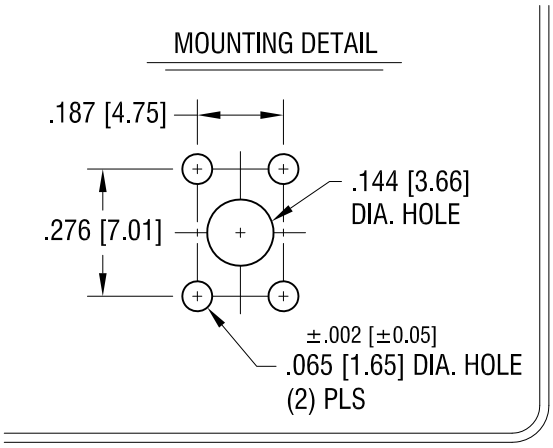

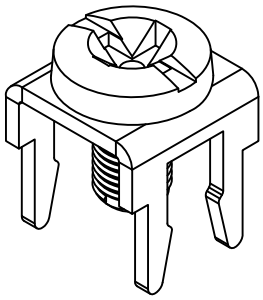

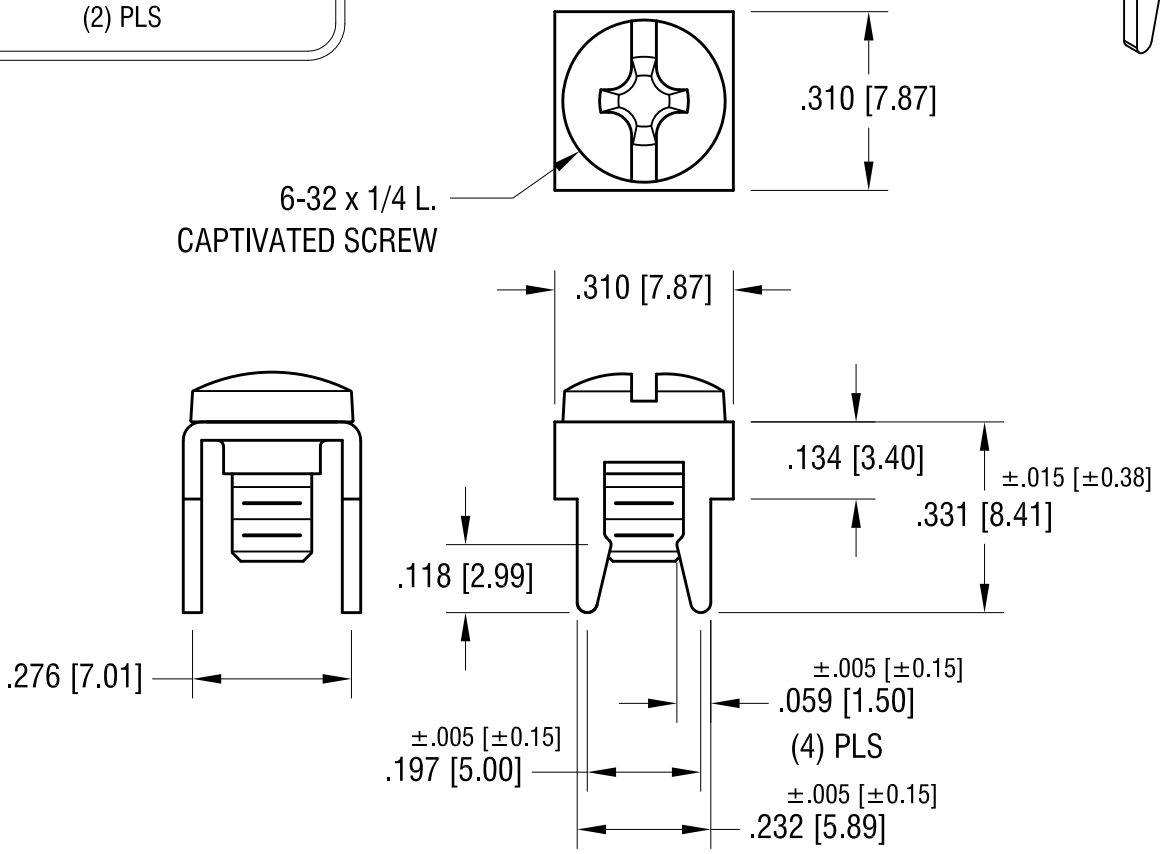

NOTES:

1. TERMINAL:
   MAT'L - .032 [0.81] TH'K BRASS, MATTE TIN PLATE

   SCREW:
   MAT'L - BRASS, NICKEL PLATE

DATE	DESCRIPTION	REV.
7.15.09	CHANGE AS PER ECN 09–102	D
12.27.07	CHANGE AS PER ECN 07–096	C

KEYSTONE ELECTRONICS CORP.

www.keyelco.com • ASTORIA, N.Y. 11105-2017 • Tel (718) 956-8900

PART NAME	LOW-PROFILE PC SCREW TERMINAL		
MATERIAL	AS NOTED		
FINISH	AS NOTED	DRN BY: BOONE	DATE: 1.7.97
		APP'D: LN	SCALE: 3X
TOLERANCES INCH [MM] DECIMAL ± .010 [± 0.25] ANGULAR ± 1° UNLESS OTHERWISE SPECIFIED	CODE: C	DWG NO.	7775