Assembly Guide

Contents

CAUTION

RISK OF EXPLOSION IF BATTERY IS REPLACED BY AN INCORRECT TYPE.
DISPOSE OF USED BATTERIES ACCORDING TO THE INSTRUCTIONS

Safety Warnings

1. The MIRO System can operate normally in the temperature of 0ºC-55ºC and relative humidity of 0%-95%. Please make sure the environment is well-ventilated.

2. Do not place the MIRO System in direct sunlight or near chemicals. Make sure the temperature and humidity of the environment are in optimized level.

3. Do not place any objects on the MIRO System for the server's normal operation and to avoid overheat.

4. Use the flat head screws in the product package to lock the hard disks in the MIRO System when installing hard disks for proper operation.

5. Do not place the MIRO System near any liquid.

6. Do not place the MIRO System on any uneven surface to avoid falling off and damage.

7. Make sure the voltage is correct in your location when using the MIRO System. If you are not sure, please contact the distributor or the local power supply company.

8. Do not place any object on the power cord.

9. Do not attempt to repair your MIRO System in any occasions. Improper disassembly of the product may expose you to electric shock or other risks. For any enquiries, please contact the distributor.

10. Please aware of the Power (DC-IN)voltage limitation : Wide Range DC IN +9V~36V. The output power voltage is (5Vdc/0.5A , 12Vdc/0.5A)

CAUTION:
Danger of explosion if battery is incorrectly replaced.
Replace only with the same or equivalent type recommended by the manufacturer. Dispose of used batteries according to the manufacturer's instructions.

DIN Rail MIRO-3 Assembly guide

1. Unscrew the 4 round-headed (M3*5) screws on the top cover of the chassis, and then remove the top cover. (Fig.1)

2. Unscrew the (P2*6) screw from the motherboard. (Fig.2)

3. Install the Mini PCIe module into the socket from the 45 degree angle. (Fig.3)

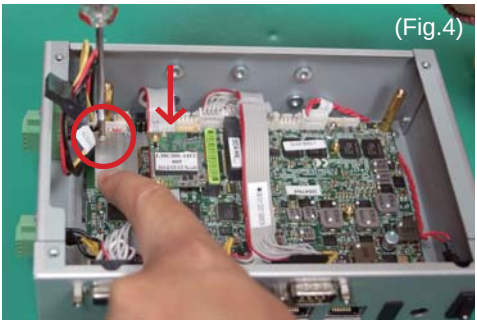

4. Press the Mini PCIe module & fix it with (P2*6) round-headed scew. (Fig.4)

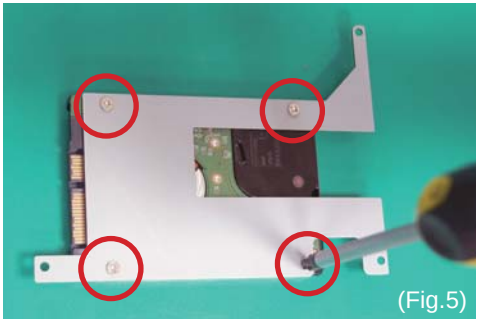

5. Screw the HDD to the HDD kit with 4 x (M3*4) screws . (Fig.5)

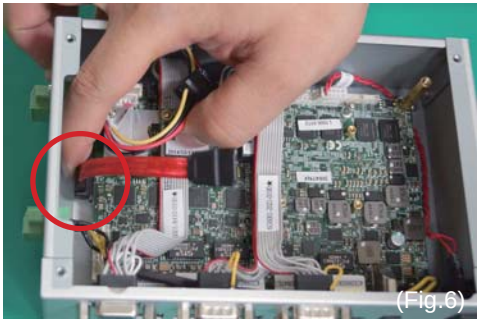

6. Insert the SATA Cable to the motherboard (Fig.6)

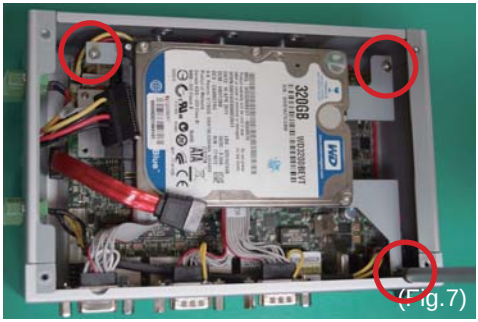

7. Screw the HDD Kit to the system with 3 x flat-headed (M3*4) screws. (Fig.7)

8. Connect the SATA DATA Cable to HDD. (Fig.8)

9. Connect the SATA Power Cable to HDD. (Fig.9)

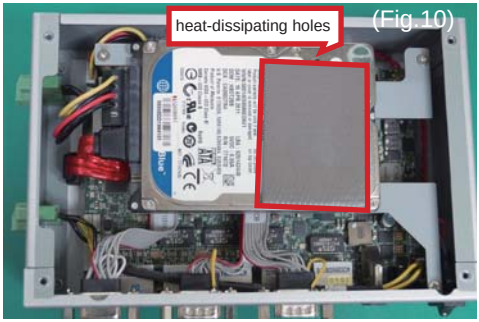

10. Attach the thermal pad on the HDD and avoid the heat-dissipating holes at the same time. (Fig.10)

11. Screw the top cover to the system with 4 round-headed M3*5 screws. (Fig.11)

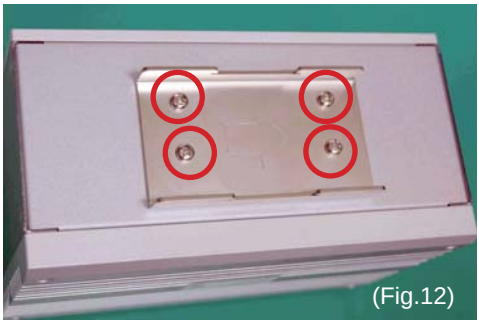

12. Screw the DIN-Rail bracket to the system with 4 round-headed (M3*4) screws. (Fig.12)

DIN Rail MIRO-3 Back Panel

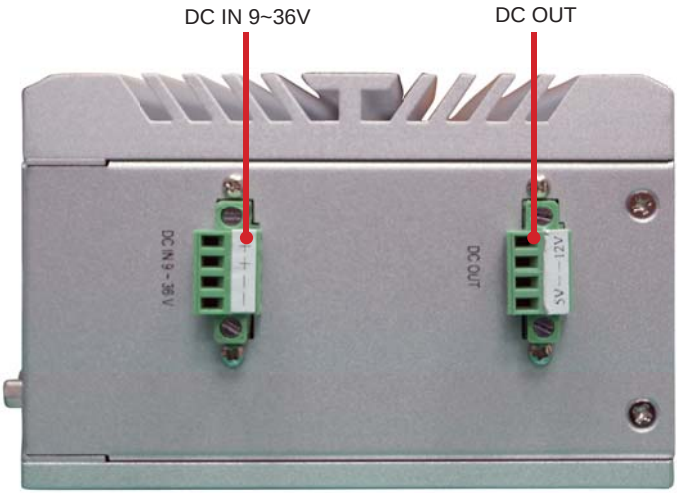

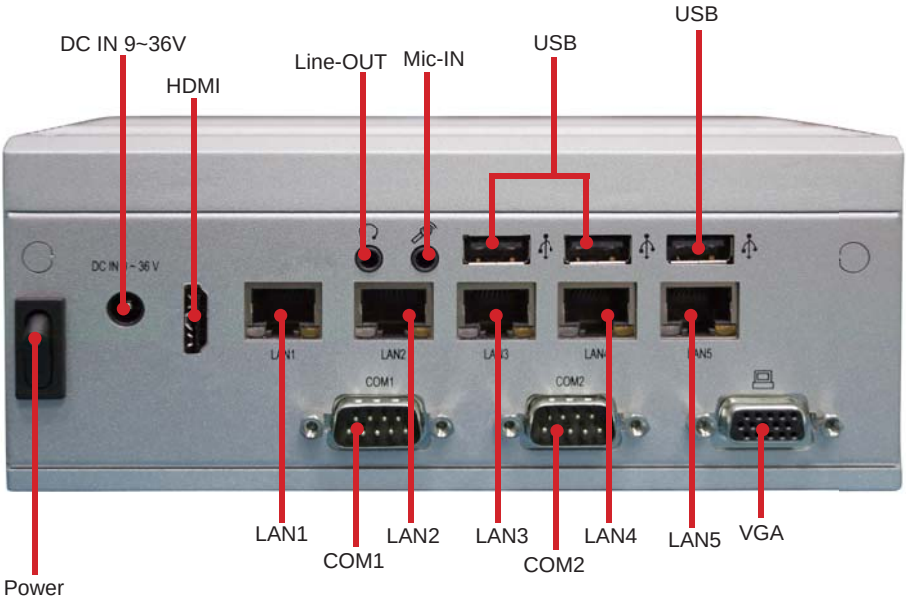

DIN Rail MIRO-3 Exploded Drawing

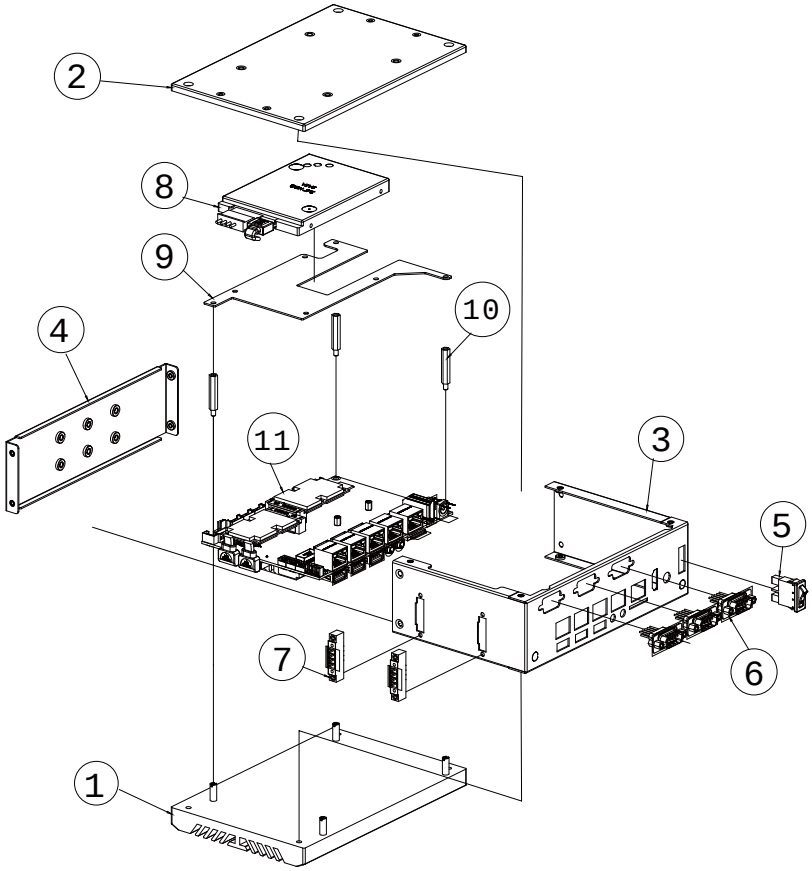

No.	Name	Q'ty	No.	Name	Q'ty
1	DIN RAIL BOTTOM COVER 3RD	1	8	2.5" SATA HDD (OPTION)	1
2	DIN RAIL TOP COVER 3RD	1	9	HDD BRACKET (OPTION)	1
3	DIN RAIL FRONT PANEL 3I847NX 2ND RE	1	10	STUD-HEX (OPTION)	3
4	DIN RAIL BACK PANEL TWO RE	1	11	3I847NX PCB	1
5	POWER SWITCH	1			
6	D-SUB	3			
7	TB CONNECTOR 4PIN	2			

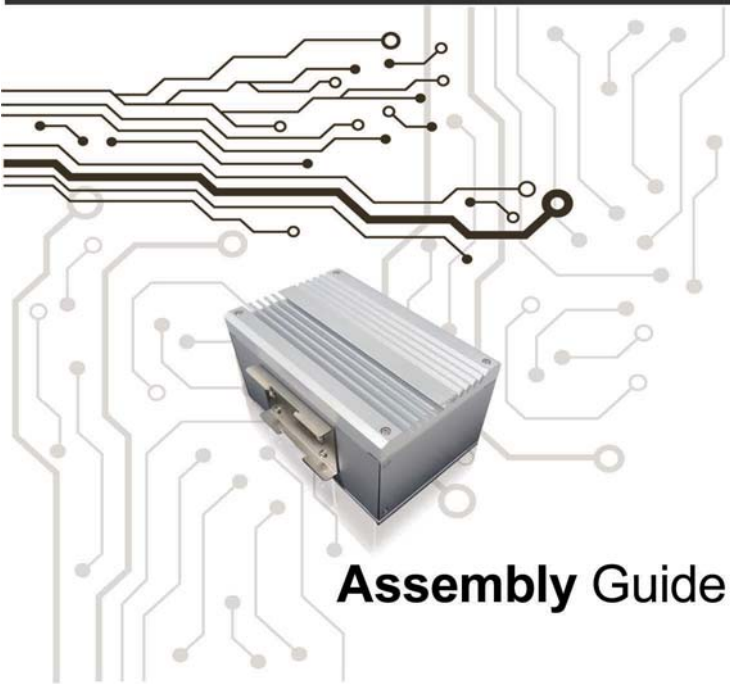

Assembly Guide

Release date: JULY. 2015